Kingston

Asset Management Plan Update 2022 - 2032

Publicly disclosed in March 2022

Update Overview

The Power Company's Asset Management Plan update 2022-32 is presented as the sections shown below under contents, which have been updated from The Power Company's Asset Management Plan 2021-31. The headings shown in the contents retain the same numbering as the previous AMP for convenient referencing. Updates are highlighted by a green shaded background generally to indicate where project implementation timeframes have varied from those indicated in the previous AMP, where new projects have been added to the capital or maintenance programmes, or where projects have been completed and therefore do not form part of the updated work plan for future years.

Contents

Enquiries

Enquiries, submissions or comments about this Asset Management Plan (AMP) can be directed to:

General Manager Asset Management
PowerNet Limited,
PO Box 1642,
Invercargill, 9840

Phone (03) 211 1899,
Fax (03) 211 1899
Email amp@powernet.co.nz

Liability Disclaimer

The information and statements made in this AMP are prepared on assumptions, projections and forecasts made by The Power Company Limited (TPCL) and represent The Power Company's intentions and opinions at the date of issue (31 March 2022). Circumstances may change, assumptions and forecasts may prove to be wrong, events may occur that were not predicted, and The Power Company may, at a later date, decide to take different actions to those that it currently intends to take. The Power Company may also change any information in this document at any time.

The Power Company Limited accepts no liability for any action, inaction or failure to act taken on the basis of this AMP.

1 Background and Objectives

The Power Company Limited (TPCL) is the electricity lines business that conveys electricity throughout the wider Southland area (except for the majority of Invercargill and Bluff) to approximately 36436 customer connections on behalf of eighteen energy retailers (per participant code utilised). The wider TPCL entity also includes the following associations:

- A 50% stake in PowerNet, an electricity lines management company jointly owned with Electricity Invercargill Limited (EIL). This is an unregulated entity and is therefore not subject to any disclosure requirements.
- A 75.1% stake in Lake Land Network Limited (LLN), which distributes electricity in the Frankton and Wanaka areas of Central Otago. The entity for disclosure is OtagoNet Joint Venture (OJV), and its AMP is prepared and disclosed by PowerNet which manages the OJV assets along with those of TPCL, EIL and LLN.
- A 75.1% stake in OtagoNet. The entity for disclosure is OtagoNet Joint Venture (OJV), and its AMP is prepared and disclosed by PowerNet which manages the OJV assets along with those of TPCL, EIL and LLN.
- A 25% stake in Southern Generation Limited Partnership, a generation company with wind and hydro assets in New Zealand jointly owned with EIL and Pioneer Generation Ltd.

The interrelationship of these entities with the various holding companies and shareholders, along with the accounting treatment of results, is described in TPCL's annual report.

A name change of the Frankton area network from Electricity Southland Limited (ESL) to Lakeland Network Limited (LLN) was completed in late 2021.

1.12. Assumptions

The assumptions as per the 2021-31 AMP are still mostly valid. The exceptions are shown in the Table below. The assumptions and potential impacts are discussed further in Section 6 Risk Management

Assumption	Discussion & Implications
Resourcing is sufficient for projected works programme.	Considerable effort has been made to ensure work volumes are deliverable by our key providers. However, unanticipated labour constraints may cause works to be delayed, and/or labour costs to rise. Covid-19 community infections may be significant in this respect.
Change in safety & work practice regulations.	Increases in health & safety requirements will have corresponding increases in cost and duration of works. Of particular concern is the more onerous traffic control measures required at worksites on public roads. This is impacting the resource availability to execute work, and are leading to cost increases. The same applies to the Tree Regulations.
Inflation forecasts for electricity industry input costs track close to expected CPI forecasts by Treasury (where specific forecasts are unavailable).	Covid-19 has led to significant equipment and material cost increases (almost 20% weighted average). This has affected the amount of work that could be executed within the available funding. Deviation from expected material, labour and overhead input costs will result in increased costs to works programmes. The projected treatment of network costs changed, depending

	on the specific changes to each input cost factor. The assumption is that these cost increases will stabilise and become more predictable.
Decarbonisation of heating will cause step changes in industrial demand, necessitating GXP and network upgrades in specific areas.	Industrial facilities looking to decarbonise are looking at electrification of process heat as one of the options. GIDI funding is making this a financially attractive option in many cases. These initiatives are taking up all the spare capacity in certain areas and often also trigger GXP upgrades. This leads to significant capex requirements for network upgrades.
Step changes in underlying growth are considered unlikely based on historical trending over a long period. Population growth used in sizing equipment is based on the high projection.	Lower population growth may result in some equipment being oversized. Likely impact on total project cost is minor. Higher population growth may initiate capacity improvement works earlier.

1.13. Potential Variation Factors

The following factors have the potential to cause significant variation between the forecasts in this AMP and the actual information that will be included in future disclosures.

Cause of variation	Implications
Cost and time estimate inaccuracies.	Project cost increase. Timing may vary, resulting in lower work efficiencies. These may trigger review of project approval if variations are sufficiently large.
Variation in inflation rates and exchange rates.	Higher input costs than forecast, less work being done for the same amount of money.
Staffing resource losses or inability to recruit as required.	Higher cost to be able to meet staffing level required to complete works. This may be coupled with deferment of investment programme, or outright cancellation of certain works if issues become ongoing.
Equipment delivery.	The Covid-19 pandemic is causing delays in material delivery form overseas suppliers. There are two reasons for this, factory shutdowns in countries where the equipment is manufactured and shipping delays, mainly caused by port congestion due to Covid-19 containment measures.

1.14. Impact of the COVID-19 Pandemic

The Covid-19 pandemic has spread around the world and several new strains of the coronavirus are appearing. Countries are in various stages of lockdown and social distancing. This is affecting the supply chain and it may have an effect on the resources available to execute this AMP.

Some challenges are listed below.

- Social distancing protocols, vaccination requirements and restrictions on access to customer sites means that certain types of work have become more difficult and costly due to the longer times required to execute.

- International suppliers and manufacturers of equipment are moving in and out of lockdown. This created difficulty in obtaining certain equipment and material.
- Offshore equipment delivery is disrupted, leading to delays in work execution.
- As Covid-19 spreads through the community, periods of staff shortages may occur in certain locations, affecting fault response and the ability to execute planned work.

Most challenges are being addressed, but there are cost and project schedule implications. It is assumed that negative effects of Covid-19 will be continuously managed during this financial year and will not have a significant impact on TPCL's ability to execute this AMP.

4 Development Planning

The development plans outline in section 4 remain as planned in the previous TPCL 2021/31 AMP. Where there have been changes these have been shown in green boxes below the original text to describe the changes in this plan. The section numbers refer to those in the previous TPCL 2021/31 AMP.

4.3 Development Programme

Current Projects (Year 1 – 2022/23)

Riversdale 22kV Line Upgrades

There has been significant load growth in the Riversdale area. The bulk of the growth has come from increased irrigation in the vicinity of Waipounamu and Freshford. Recent irrigation load connection requests have been received which means that the existing 11kV network cannot deliver acceptable voltage. This growth has also eroded the 11kV backup capability between the Lumsden and Riversdale substations.

Transfer of load to a new substation around Balfour (which is approximately halfway between Riversdale and Lumsden) would alleviate the transformer capacity trigger and improve the 11kV backups between Riversdale and Lumsden. However, the new substation at Balfour would not provide a solution to the load growth being experienced north of Riversdale in the Waipounamu and Freshford areas and as such has been removed as a project.

It is proposed to upgrade the existing Riversdale substation in the short to medium term. The upgrade will include the establishment of 22kV at Riversdale. This will integrate with the long term distribution network including Lumsden. In preparation, sections of the Riversdale 3 feeder is being prepared for 22kV. An additional feeder is also to be installed splitting the Riversdale 3 and Riversdale 4 load more equally.

Cost $1,370M for 2021/22, $0.425M for 2022/23, $0.425M for 2023/24 and $0.437M 2024/25 – System Growth

Riversdale 22 kV Line Upgrade project has been started and is continuing as planned.

The budgets for the following years have been increased to reflect known material and delivery price increases and general labour rate inflation.

Cost $0.48M for 2022/23, $0.48M for 2023/24 and $0.49M 2024/25 – CAPEX System Growth

22kV Upgrade Athol – Kingston

Load growth occurring in and around Kingston Township is forecast to exceed the ability of the 11kV network to supply adequate voltage. The new loads are mainly irrigation demand for the summer months and the proposed Kingston Village development which will consist of an approximate 700 residential units. The proposed implementation plan is to progressively upgrade the network until a new 66/11kV zone substation is required.

The proposal is to phase the upgrade as follows:

Phase 1 is to upgrade a portion of the ATH5 feeder from Squirrel and fox conductor to Iodene. The existing Fairlight regulator is to be replaced with a new dual voltage (22/11kV) unit at Garston. Two additional regulators are to be installed at Black bridge and Allandale respectively.

Phase 2 install a 500kVAr static VAr generator at Kingston

Phase 3 is to convert the AHL5 feeder from 11kV to 22kV. Minor alterations will be required at Athol substation and the AHL3 feeder will require a 22/11kV auto transformer to provide correct voltage interface with the separate voltages. The upgrade will include the re-insulation of the AHL5 feeder but some laterals will be kept at 11kV to limit costs. 22/11kV autotransformers will be installed at identified laterals. Due to access limitations on the existing AHL feeder from Athol, a new 22kV cable will be installed, connecting the Athol local load and being re-introduced in the existing AHL feeder at Black bridge. The conversion program will be done in a progressive manner as it is not possible to transfer all load onto alternative circuits to upgrade the AHL5 feeder.

Cost of $0.910M during 2021/22, $2,119M during 2022/23, $1,506M during 2023/24 and $2,309M during 2024/25; CAPEX – System Growth

Athol - Kingston 22 kV Line Upgrade project has been started with phase one being completed in 2022. Phase 2 and 3 will continue as planned.

The budgets for the following years have been increased to reflect known material and delivery price increases and general labour rate inflation.

Cost $2.4M for 2022/23, $1.7M for 23/24 and $2.6M 2024/25 – CAPEX System Growth

Communications Projects

There are two main issues with the communications networks in TPCL area.

There has been very little in the way of equipment replacement or development over many years. It utilises thin route serial and time division multiplexing technology. Modern substation equipment has migrated to Internet Protocol based input and output systems. This requires an IP capable communications network. This will bring the ability to monitor protection relays remotely including the ability to obtain fault records and wave analysis to assist in the detection of faults.

Many of the existing communications links do not have backup paths.

These issues are planned to be addressed within the planning period. The first phase of the project is to create an alternative communication link between Invercargill and North Makarewa GXP. The first stage will be completed during 2020/21.

Cost $0.48M for 2021/22, and Under $0.4M for 2022/23 to 2030/31; CAPEX – Other Reliability

Communication Upgrade project continues as planned with the major upgrade work being completed in 2022 with ongoing minor replacement and upgrades in subsequent years.

Cost $0.37M for 2022/23, $0.2M from 23/24 to 26/27 then under $0.46M from 2027 – CAPEX Other Reliability, Safety and Environment

Substation Safety

Arc flash hazards have been identified around indoor MV switchgear at zone substations, presenting a risk of harm to personnel inside substation buildings, especially during operation of the switchgear.

The project will retrofit arc flash detection through the use of modern protection relays to all indoor switchboards. This will reduce the hazard for personnel to under the levels provided by 8cal/cm^2 overalls required to be worn by all staff when entering zone substations. Additional PPE (Personal Protection Equipment) was considered as an alternative, but was determined to be suboptimal as each employee would require a full 40cal/cm^2 suit and the bulky PPE to achieve this level of protection creates additional hazards for personnel.

Cost Under $0.3M per annum 2021/22 and 2022/23; CAPEX – Other Reliability, Safety and Environment

Substation Safety – Arc Flash project will be completed in the 2022/23 year with the upgrading the protection at Waikiwi substation

Cost Under 0.3M for 22/23 – CAPEX Other Reliability, Safety and Environment

Remote Area Power Supplies

There are a number of remote spurs on the network which have very little load attached to extended lengths of overhead networks requiring high maintenance costs. At these locations there is an option to implement the usage of a Remote Area Power Supply. The remote supply will eliminate the requirement of the existing electrical circuit, thus eliminating excessive maintenance and refurbishment costs in future. Installations are site specific and installed to provide suitable capacity for current and future demand.

Cost under $0.3M from 2021/22 to 2023/24 and then continuous per year from 2026/27 to 2030/31; CAPEX - Other Reliability, Safety and Environment

Remote Area Power Supply opportunities continue to be investigated, tested and planned over the next two years with more work expected later in the planning period.

Cost under $0.2M from 2022/23 to 2023/24 and then under $0.3M per year from 2026/27 to 2031/32 – CAPEX Other Reliability, Safety and Environment

Hillside Protection Remediation

There is no backup protection at Hillside substation. The existing network configuration also have limitations and require an upgrade to improve network sensitivity. This needs to be remedied in order to increase the safety and the equipment protection at this site.

Cost $0.369M in 2021/22; CAPEX - Other Reliability, Safety and Environment

Hillside Protection Remediation project has been largely completed with only minor completion work left to complete.

Cost under $0.05M in 2022/23 – CAPEX Other Reliability, Safety and Environment

New – North Gore Substation Overhead Structure Removal

The overhead 11kV line terminations in the Gore Substation are too close to the fence on the road side, posing a public safety risk. With an indoor switchboard the cables can be extended to the first pole on the lines to remove this hazard.

Cost under $0.4M in 2022/23 – CAPEX Other Reliability, Safety and Environment

New – Kennington Fibre install to Racecourse Road

With the recently installed second 33 kV supply to Kennington substation there is need for better protection and control of the cables and substation. There is an opportunity to share fibre install costs with the Invercargill City Council who also need to install fibre to their new pump station.

Cost $0.2M in 2022/23 – CAPEX Other Reliability, Safety and Environment

New - Underwood Substation Upgrade for Alliance Load Increase

Alliance Loreneville has been successful in their Government Investment in Decarbonisation Industry funding application and will install a new electrode boiler at their plant. To meet this increased load the two new upgraded overhead lines will be built from the local Underwood substation which will also require two new large 11 kV circuit breakers to be added to the existing switchboard and an upgrade to the 33 kV protection on the incoming circuits to allow this increased load. There will be a customer contribution and increased line charges to recover the costs.

Cost under $0.65M in both 2022/23 and 2023/24 – CAPEX Consumer Connection

New – McNab Substation Upgrade for Mataura Valley Milk Load Increase

Mataura Valley Milk has been successful in their Government Investment in Decarbonisation Industry funding application and will install a new electrode boiler at their plant. To meet this increased load the McNab substation will be configured in its final state with two incoming 33 kV feeders from Gore and two 33/11 kV transformers in our McNab substation. The McNab substation has all the required 11 kV switchgear installed, but is currently being fed by the cables from the South Gore substation running at 11 kV only.

The work will consist of extending the 33 kV cables to the Transpower Gore GXP with two new circuit breakers and installing the two transformers in the McNab substation along with the associated protection. The increased load requires a capacity upgrade for the Transpower Gore GXP transformers and TPCL has engagedTranspower to deliver this upgrade and new connection assets. There will be a customer contribution and increased line charges to recover the costs.

Cost $4.65M in both 2022/23 and 2023/24 – CAPEX Consumer Connection

New – Kaiwera Downs – Mercury 45 MW Wind Farm Connection

Mercury have committed to proceed with a 45 MW wind farm at Kaiwera Downs and require a 33 kV line and connection to the Transpower Gore GXP. The line has been designed and land access negotiated with the actual line construction to start in 2022 with completion required in the 2023/24 year. As part of the NcNab substation work above Transpower will also supply another connections for the 33 kV line. There will be a customer contribution and line charges to recover the costs.

Cost under $5.2M in both 2022/23and 2023/24 – CAPEX Consumer Connection

New – Upgrade Sections of the Invercargill to Colyer Road 33 kV Line

Previously a third 33 kV line from the Invercargill GXP to Colyer Road substation had been considered for major load growth in the area. While these major requests have not eventuated there have been a number of smaller requests and load flow analysis has indicated that there are a few sections of the existing lines that are older smaller conductor and is restricting the capability of the existing lines. Replacing these small sections with larger conductor will provide the required capacity and improve voltage quality.

Cost under $0.2M in 2022/23 – CAPEX System Growth

New – Upgrade Sections of the Kennington to Woodlands 11 kV Line

Load growth in the Woodlands and Morton Mains area, including the Blue Sky Meats has led to lower voltage before the woodlands regulator. Part of the 11 kV line between Kennington and Woodlands will be upgrade as part 1 the solution to improve voltage. If further load increases are seen or if Blue Sky Meats request further load increases a second regulator will be installed.

Cost $0.4M in 2022/23 – CAPEX System Growth

Planned Projects (Years 2 – 5: 2023/24 – 2026/27)

Riversdale Substation Upgrade

Load growth has reached the capacity trigger point of 5MVA which aligns with the existing single 33/11kV 5MVA transformer.

Although load growth in recent years had been lower than expected, loading has increased in the last financial year. An analysis of the loading data shows that the 5MVA ONAN capacity of the transformer is only exceeded for short periods at peak times. Fans have been installed to accommodate an additional demand during these short periods. Following this analysis it has been determined that no action is required until the peak load exceeds 6MVA as the loading up until this point will remain within the overload capability of the transformer.

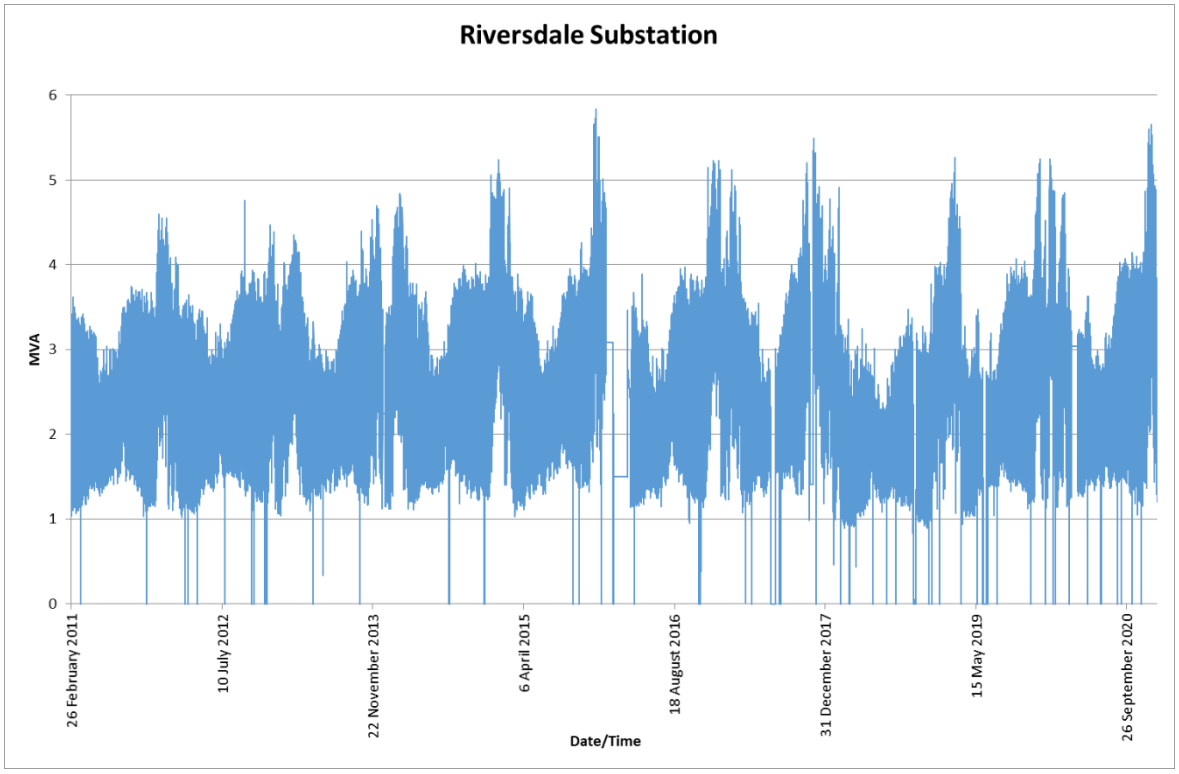

Figure 1 - Riversdale Substation Load Profile

Load transfer within the 11kv network has limited scope and if load growth occurs as projected at Riversdale, a substantial upgrade of the substation will be required. The proposed solution is to install a new 66/22kV, 6/12MVA transformer and 22kV indoor switchboard with four feeders, two incomers and a bus coupler. The new transformer would operate in parallel with the existing 33/11kV 5MVA unit. The new switchboard would have 2 feeders operating at 11kV and 2 feeders operating at 22kV with the bus coupler remaining open. Backup between the 2 transformers will be achieved by the use of 11/22kV autotransformers installed at tie-points between the 11kV and 22kV feeders. The bus-section breaker would be permanently locked racked out until the complete network is converted to 22kV. A diagram of the proposed solution is shown in figure 2.

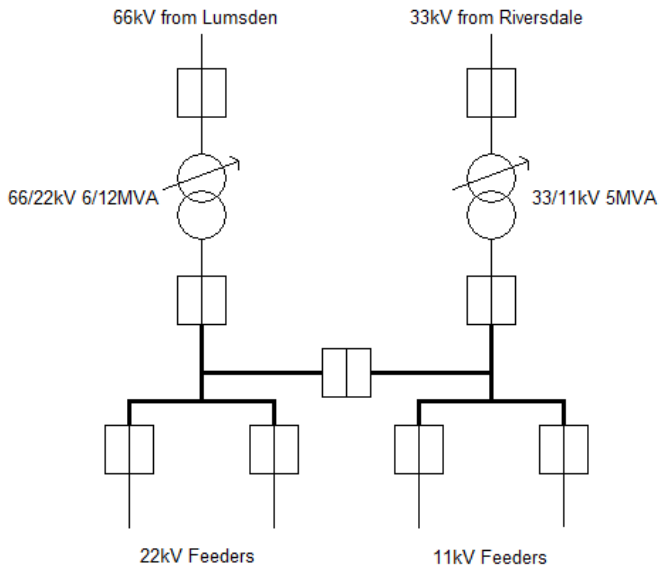

Figure 2 - Proposed Riversdale Single Line Diagram

Cost under $1,557M per annum 2023/24 to 2024/25; CAPEX - System Growth.

Riversdale Substation Upgrade project is still planned for the 2023/25 years as above.

The budgets for the following years have been increased to reflect known material and delivery price increases and general labour rate inflation.

Cost $1.8M for each of 2023/24 and 2024/25 – CAPEX System Growth

Kelso Transformer Upgrade

Load growth is forecast to exceed the 5MVA capacity of the transformer at Kelso Substation in the medium term. This project will add fans to the transformer to increase its capacity. This should provide for another 10 years of growth.

Consideration was given to load transfers, within the 11kV network, to keep load under 5MVA however backup capability on 11kV from neighbouring substations is limited by voltage drop so load transfer is not practical.

Further consideration was also given to adding a second transformer. However, this would require new switchgear and changes to the existing spare transformer pad. The security standard does not require two transformers and the mobile substation can be deployed to allow maintenance or upgrade. The installation of a second transformer was considered likely to be more expensive and not an efficient use of capital.

Cost $0,1M - $0,2M 2025/26; CAPEX - System Growth.

Kelso Transformer Upgrade project has no material change.

Glenham Transformer Upgrade

Load growth is forecast to exceed the nominal capacity of the transformer at Glenham Substation in 2022. If load growth continues, the project will be brought forward to 2022. The substation provides limited 11kV backup to the adjacent Gorge Road and Tokanui substations, it is proposed to replace the

single 33/11kV 1.5MVA power transformer at Glenham substation with a new 33/11kV 3MVA transformer or refurbished 5MVA transformer.

Cost $1,411M 2025/26; CAPEX - System Growth.

Glenham Transformer Upgrade project is still planned for the 2025/26 year as above.

The budgets for the following years have been increased to reflect known material and delivery price increases and general labour rate inflation.

Cost $1.6M for 2025/26 – CAPEX System Growth

New – Jericho – Southern Generation 35 MW Wind Farm Connection

Southern Generation have requested a simple connection to the 66 kV line between Monowai and Te Anau substations for a 6-7 turbine wind farm to be built at Blackmount.

Cost under $0.3M in 2024/25 – CAPEX Consumer Connection

Projects (Years 6 – 10: 2027/28 – 2031/32)

Unspecified Projects

The unspecified projects budget is an estimate of costs for projects that are as yet unknown, but from experience are considered likely to arise in the longer term (six to ten year time frame). Certainty for these estimates is obviously quite low.

The distribution network between North and South Gore is a meshed network with tie point changes reflecting on both substations load profiles. Load growth projections at both North and South Gore are being closely monitored. If growth continues as projected, the upgrade of capacity will be brought forward within the period. The two substations also play a key role in the Gore GXP demand profile.

$1.5M - $4M per annum 2025/26 onwards; CAPEX - System Growth

No material change.

Cost $1.7M to 3.6M 2025/26 onwards – CAPEX System Growth

Condition Based asset replacements

Budget has been allocated to replace or renew assets not currently funded from the short term budget timeline. Through the improvement of fleet plans and asset condition assessments, individual programs will be implemented.

Under $6M from 2026/27 to 2031/31.

No material change.

Cost under $6M 2026/27 onwards – CAPEX Asset Replacement and Renewal

Routine / Ongoing Projects

Customer Connections + New Subdivisions

These budgets are for new connections to the network including subdivisions where a large number of customers may require connection. Each individual solution will depend on location and the customers' requirements.

The new connections budget uses averages based on historical trending, modified if there is any information available however customer requirements are generally unpredictable and quite variable. Larger customers especially, which have the greatest effect on the network, tend not to disclose their intentions until connection is required (perhaps trying to avoid alerting competitors to commercial opportunities), so cannot be easily planned for in advance.

Various options are considered generally to determine the least cost option for providing the new connection. The work required depends on the customer's location relative to the existing network and the capacity of that network to supply the additional load. This can range from a simple LV connection at a fuse in a distribution pillar box at the customer's property boundary, to upgrade of LV cables or replacement of overhead lines with cables of greater rating, to the installation of a new transformer site with associated 11kV extension if required. Even small customers can require a large investment to increase network capacity where existing capacity is already fully utilised.

Distributed generation as a network alternative tends to be intermittent so cannot be relied on without energy storage which may make an installation uneconomic. Some schemes may be becoming cost competitive with supply from the network however the upfront cost is generally not attractive to most customers and generally a connection to the network is still desired as backup, supplementation and sometimes the ability to sell surplus energy. Customers may be encouraged to better manage diversity of load within their facilities where details are known and there is a perceived benefit to the customer or the network owner.

Cost $3M in total over a number of budgets per annum on-going; CAPEX - Consumer Connections.

No material change.

Cost under $3M 2022/23 onwards – CAPEX Consumer Connection

Line Relocation Projects

This budget captures costs for relocation works when requested by authorities or customers such as shifting a pole or pillar box to a more convenient location. Costs budgeted represent a long term average with actual spend being reactive and typically above or below budget in any year.

Cost Under $0.2M per annum on-going; CAPEX – Asset Relocations

No material change.

Cost under $0.2M 2022/23 onwards – CAPEX Asset Relocations

Supply Quality Upgrades

This covers projects to remedy poor power quality. Most cases of poor power quality on TPCL's network are reports or measurements of low voltage. Voltage is either then measured (or calculated to vary) outside of regulatory limits.

Each of the below options / situations are considered and an appropriate solution implemented.

- Installation of 11kV regulators.
- Up-sizing of components (Conductor, Transformer).
- Demand side management. (Planning an Irrigation ripple control channel.)
- Power factor improvements. (Ensuring customer loads are operating effectively.)
- Harmonic filtering / blocking. (Ensuring customers are not injecting harmonics.)
- Motor starter faults / settings remedied. (Ensuring customer equipment is working and configured appropriately.)

Costs budgeted represent a long term average with actual spend being reactive typically being above or below in any year.

Cost under $0.5M per annum on-going; CAPEX – Quality of Supply.

No material change.

Cost under $.04M 2022/23 onwards – CAPEX Quality of Supply

Mobile Substation Site Made Ready

This project provides connection points for the mobile substation at single transformer substations. The aim is to have each substation suitably arranged to allow the mobile substation to be connected for either maintenance activities or to cover transformer or other major equipment failures. The works will vary at each substation but could include additional land, fencing, gravel, earthing, HV connection / isolation point, MV connection / isolation point.

Cost Under $0.3M alternate years 2022/23 & 2024/25; CAPEX – Quality of Supply

No material change.

Cost under $0.2M 2022/23 and under 0.3M in 2024/25 – CAPEX Quality of Supply

Network Improvement Projects

Projects to improve reliability through installation of remotely controlled field circuit breakers and load break switches or closing short gaps between adjacent 11kV circuits.

Cost Under $0.2M per annum on-going from 2020/21 while alternating between 2021/22 until 2025/26; CAPEX – Quality of Supply

No material change.

Cost under $0.2M 2022/23 onwards – CAPEX Quality of Supply

Earth Upgrades

Ineffective earthing may create hazardous voltage on and around network equipment (Earth Potential Rise; EPR) during fault situations potentially affecting safety for the public and for staff. Poor earthing can also prevent protection systems from operating correctly, which may affect the safety and reliability of the network. Routine earth site inspection and testing identifies any sites that require upgrades.

Determining the most appropriate upgrade option can be quite complex, but the ultimate aim is to find the optimal trade-off between cost and risk reduction. Upgrade works may include additional earthing rods or banks, replacement of surface material (asphalt or gravel) to reduce risk, and installation of insulating fences or fence sections to reduce the risk of transfer of voltage to adjacent conductive fences.

Routine testing is completed five yearly.

A number of sites have been identified for the required upgrading of the existing earthing system. Additional CAPEX has been allocated in the 2021/22 financial year to address the immediate need.

Cost under $3M from 2021/22 to 2024/25 then under $1.5M from 2025/26 to 2030/31; CAPEX – Other Reliability, Safety and Environment.

Earth Upgrades continue at a high rate for 2023 to 2025 to address all the high them medium priority sites the continue at a lower rate on the lower priority sites from 2025.

Cost under $3.3M 2022/23 to 2024/25 them $1.4M – CAPEX Other Reliability, Safety & Environment

4.4. Contingent projects

The following projects are classified as contingent projects. They are contingent upon particular projects going ahead and further investigation. These have not been included in TPCL's spend plans as yet and will only do so if/when they become more certain.

Edendale Process Heat Electrification/ Transpower Edendale Transformer Upgrade

The Fonterra Edendale plant currently uses coal to provide the process heat. There is a proposal to replace coal as the energy source with either electricity or biomass. The Edendale factory is not likely to be the first plant which Fonterra has these modifications. This would be a Transpower/ PowerNet combined project. The net effect of any technology changes from coal to biomass is not expected until the second halve of the 10year demand forecast. A 10MVA to 15MVA demand increase, between 2028 to 2030, is possible but require further investigations in future years along with Fonterra and their business strategy.

More generally, the load at Edendale GXP is approaching the continuous rating (30MVA) of Transpower's T1/T2 transformer at Edendale bank. This puts supply at risk in the event of one transformer being out of service. PowerNet is working with Transpower and Fonterra to understand the upgrade options of the summer and winter ratings of the transformers so as to understand the supply risk and possible mitigation measures.

Control measures include increased load control, tie point and load shifts to other GXPs, and Special Protection Schemes which will automatically shed load in the event of a transformer tripping.

These two issues will need to be looked at as a combined entity.

Kingston 66kV

When the load increases beyond the capability of the 22kV circuit to Kingston, a zone substation, to be known as Kingston 66/22kV 5MVA substation, will be required. The subtransmission supply will be 66kV and supplied from the Athol 66kV supply point. The network extension will require a new 35km overhead line to be constructed. Initially a 66kV single circuit will be constructed, utilising the 22kV network as a backup supply. In the following years the substation will require a second 66kV supply to provide firm capacity to the 5MVA demand.

Implementation of the project is completely dependent on the demand requirements and realisation of the Kingston Village Limited subdivision.

North Makarewa-Frankton 66kV Strengthening

The Queenstown regional area, including Frankton, is currently one of the fastest developing regions in the South Island. The area is supplied with a single GXP station. The GXP is supplied via a single double circuit 110KV supply from Cromwell.

The existing Transpower Frankton transmission network, is approaching the safe firm capacity level of 70MVA, with the peak period occurring during the winter months when the demand requirements almost doubles from the peak summer period. Various options are considered by Transpower, OtagoNet and Aurora. This includes interim solutions including battery storage and generators to more permanent long term solutions including re-conductoring, transformer upgrades and the construction of a new transmission circuit.

In addition, PowerNet is exploring alternative supply connections from the 66kV subtransmission network to Frankton. In addition to the additional capacity requirements at Frankton, the extension of the networks will also address the Kingston 66kV future connection. A further consideration of the study is to determine the feasibility of interconnection between Gore/North Makarewa/Frankton networks improving the overall stability and redundancy of the subtransmission grid.

66kV Supply from Gore GXP

This project will create a 66kV supply point at Gore GXP by installing a 33/66kV step up transformer adjacent to the Gore GXP site. This 66kV supply point will be used to provide a second 66kV supply to the Riversdale substation. The existing Gore to Riversdale line (operating at 33kV) has been reinsulated to 66kV. This project will also need to upgrade the 33/11kV transformer at Riversdale to 66/22kV.

Colyer Road Third 33kV Line

If any further additional major load growth requests are received for the Colyer Road zone substation supply point, this would mean either that a third 33kV subtransmission line would need to be constructed from Invercargill GXP or the upgrade of the existing lines.

Some smaller load increases have been seen and the smaller sections of the existing two 33 kV lines are being upgraded in the 2022/23 year to give an improvement now, see new projects above.

Additional Milk Processing

Additional Milk Processing plants at existing or new sites.

Electrification of Heat Processing plants

The creation of the investment fund, by National Government, to support the conversion of coal and gas boilers to electricity supply, have resulted in a number of market enquiries. The typical capacity requirements would require network upgrades, at either a subtransmission or zone substation level, to support demand.

See Underwood and McNab substation upgrades above for the first of these requests.

Data Centres

The establishment of new data centres, requiring high level of supply availability, will require upgrades on the 33kV network between Invercargill and North Makarewa GXP's. Capacity will be limited to suitable levels at 33kV. The level of supply security will determine suitable locations within the network to accommodate the data centre.

Certain data centre demand requirements, may make it more economical to be connected directly onto Transpower's 220kV network.

Coal to Liquid Plants

Possible major new industry that may require a new substation and subtransmission lines, most likely would be onto the Transpower 220kV network.

Mines

Possible mineral extraction with power required to operate the mine and/or process the material. Possible resources include coal, lignite, silicon, gold, or platinum.

Oil Refineries

Possible major new industry that may require a new substation and subtransmission lines, most likely would be onto the Transpower 220kV network.

Wind farms

It is possible that there may be one or more large (>5MW) wind farm projects which come to fruition. These may require new subtransmission lines and/or zone substations.

This includes the potential Kaiwera Downs wind farm proposal which is classed as a contingent project at the moment.

See the new Kaiwera Downs and Jericho wind farm Projects included above.

4.5. Distributed Generation Policy

The value of distributed generation can be recognised in the following ways:

- Reduction of peak demand at the Transpower GXP.
- Reducing the effect of existing network constraints.
- Avoiding investment in additional network capacity.
- Making a very minor contribution to supply security where the customers are prepared to accept that local generation is not as secure as network investment.

- Making better use of local primary energy resources thereby avoiding line losses.
- Avoiding the environmental impact associated with large scale power generation.

It is also recognised that distributed generation can have the following undesirable effects:

- Increased fault levels, requiring protection and switchgear upgrades.
- Increased line losses if surplus energy is exported through a network constraint.
- Stranding of assets, or at least of part of an asset's capacity.
- Raising voltage above regulated levels to enable export of electricity

Despite the potential undesirable effects, the development of distributed generation that will benefit both the generator and TPCL is actively encouraged. The key requirements for those wishing to connect distributed generation to the network broadly fall under the following headings, with a guideline and application forms available on the web at http://www.powernet.co.nz/your-power-supply/distributed-generation/

Connection Terms and Conditions (Commercial)

- Connection of up to 10kW of distributed generation to an existing connection to the network will not incur any additional line charges. Connection of distributed generation greater than 10kW to an existing connection may incur additional costs to reflect network up-sizing.
- Distributed generation that requires a new connection to the network will be charged a standard connection fee as if it was a standard off-take customer.
- An application administration fee will be payable by the connecting party.
- Installation of suitable metering (refer to technical standards below) shall be at the expense of the distributed generator and its associated energy retailer.
- Any benefits of distributed generation that arise from reducing TPCL's costs, such as transmission costs or deferred investment in the network, and, provided the distributed generation is of sufficient size (greater than 10kW) to provide real benefits, will be recognised and shared.
- Those wishing to connect distributed generation must have a contractual arrangement with a suitable party in place to consume all injected energy – generators will not be allowed to "lose" the energy in the network.

Safety Standards

- A party connecting distributed generation must comply with any and all safety requirements promulgated by TPCL.
- TPCL reserves the right to physically disconnect any distributed generation that does not comply with such requirements.

Technical Standards

- Metering capable of recording both imported and exported energy must be installed if the owner of the distributed generation wishes to share in any benefits accruing to TPCL. Such metering may need to be half-hourly.

- TPCL may require a distributed generator of greater than 10kW to demonstrate that operation of the distributed generation will not interfere with operational aspects of the network, particularly such aspects as protection and control.
- All connection assets must be designed and constructed to technical standards not dissimilar to TPCL's own prevailing standards.

Congestion Policy

TPCL notes all medium distributed generation connections (>100kW) on the North Makarewa GXP are subject to congestion due the existing generators resulting in this GXP exporting. This means distributed generators >100kW will likely be subject to High Voltage Direct Current (HVDC) Link charges.

4.6. Use of Non-Network Solutions

As discussed in section 4.1 the company routinely considers a range of non-asset solutions and indeed TPCL's preference is for solutions that avoid or defer new investment. Table 1 outlines how TPCL considers various investment options.

Table 1: Classes of Investment options

Class of Option	Description	Residual risk	PowerNet preference
Do-nothing	Intervention limited to minor operational fixes.	Loss of supply risk unmitigated, likely to increase over time.	This option is generally avoided unless the residual risk is demonstrated to be acceptably low.
Non-network	Network switching to shift load. Interruptible tariffs to manage demand. Install additional cooling to increase asset capacity.	Can increase network losses.	These options tend to only defer rather than avoid investment.
	Install batteries to meet peak demand.	Mitigation of loss of supply risk depends on battery capacity and discharge duration.	
	Install embedded generation to relieve constraints.	Relies on embedded generation operating during periods of network congestion to reduce loss of supply risk.	
Network	Traditional copper and concrete investment to increase asset capacity, reliability, security etc.	Loss of supply risk tends to be fully mitigated, but can be offset by risk of investment stranding.	Tends to be the only practical long-term option, especially where the network is already heavily loaded.

Effectiveness of tariff incentives is lessened with Retailers repackaging line charges that sometimes removes the desired incentive. 'Use of System' agreements include lower tariffs for controlled, night-rate and other special channels.

Load control is utilised to control:

- Transpower charges by controlling the network load during the LSI peaks.
- GXP load when maximum demand reaches the capacity of that GXP.
- Load on feeders during temporary arrangements to manage constraints.

Load shedding may be used by some customers where they accept a reduction of their load instead of investing in additional network assets.

Generators (owned by PowerNet) are sometimes used to minimise the impact of significant planned outages on TPCL network.

The acquisition of a mobile substation raises the threshold at which TPCL justifies converting a single-transformer substation to a dual-transformer site; resulting in significantly deferred growth-related investment on the larger single-transformer substations.

Where the nature of the load and network permit, stand-by generators and network storage solutions (batteries) are considered as an alternative to line upgrades.

Other low investment options typically considered include;

- Conductor upgrades
- Voltage regulators
- Pumps and fans on power transformers
- Tie point shifts

It is however noted that there are limits to the capabilities of low investment options to meet growth when the capacity headroom is used up or when demand growth is significant or step-changes in demand are occurring.

4.7. Non-network Development

IT Services

TPCL receives IT and management services support through its management services contract with PowerNet. Whilst it does not directly develop the GIS (Intergraph) or AMS (Maximo) systems, it does in conjunction with PowerNet develop interfaces and processes around these systems.

Smart Energy Home

PowerNet's Emerging Technologies programme has been exploring the impact that solar PV, battery storage, electric vehicles and other 'smart' technology might have on TPCL networks as these technologies develop and the cost becomes more affordable. Out of this project, it has become apparent that emerging technologies are set to have a large impact and while not immediate it is important for TPCL to understand as much as possible about them before they arrive in large numbers.

The Smart Energy Home is based in TPCL's owned house at 245 Racecourse Road. The house has the following smart energy features;

- 4kW solar PV system (14 panels and inverter)
- 10kWh battery for energy storage
- Electric vehicle – Nissan Leaf
- Electric vehicle charging station
- Hot water heat pump unit
- Heat pumps in living room and hall way for space heating
- Insulation under floor and in the ceiling
- Lighting converted to LED

A monitoring system has been installed that will meter consumption individually from the key technologies and significant appliances in the home. This data will be collected for analysis by PowerNet to assess how these technologies operate and are being used.

The retail electricity pricing package has pricing that varies through the day and been chosen to provide an incentive to use power in a way that is most efficient for TPCL's networks (using less power over peak demand times); the technologies installed are all geared toward helping people with this.

The home will be tenanted to understand how a consumer would use these technologies.

4.8. TPCL's Forecast Capital Expenditure

The forecast capital expenditure for TPCL is shown in Table 2. These figures are also provided in the information disclosure schedule 11a included in Appendix 3.

Table 2: TPCL's Forecast Capital Expenditure – ($000 – constant 2022/23 terms)

CAPEX: Consumer Connection	2022/23	2023/24	2024/25	2025/26	2026/27	2027/28	2028/29	2029/30	2030/31	2031/32
Customer Connections (≤ 20kVA)	1,169	1,169	1,169	1,169	1,169	1,169	1,169	1,169	1,169	1,169
Customer Connections (21 to 99kVA)	572	572	572	572	572	572	572	572	572	572
Customer Connections (≥ 100kVA)	705	705	705	705	705	705	705	705	705	705
Distributed Generation Connection	6	6	6	6	6	6	6	6	6	6
New Subdivisions	506	506	506	506	506	506	506	506	506	506
Underwood substation upgrade for Alliance	625	625								
McNab Substation upgrade to 33 kV	4,450	4,450								
Kaiwera Downs - Mercury 45MW wind farm	5,012	5,012								
Jericho - Southern Generation 35MW wind farm			254							
	13,045	**13,045**	**3,211**	**2,957**	**2,957**	**2,957**	**2,957**	**2,957**	**2,957**	**2,957**

CAPEX: System Growth	2022/23	2023/24	2024/25	2025/26	2026/27	2027/28	2028/29	2029/30	2030/31	2031/32
Riversdale Substation Upgrade		1,747	1,747							
Kelso Transformer Upgrade				154						
Glenham Transformer Upgrade				1,551						
Lumsden / Riversdale 22kV Line Upgrades	454	454	461							
22kV Upgrade Athol - Kingston	2,270	1,583	2,476							
Easements	29	29	29	29	29	29	29	29	29	29
Unspecified Projects				1,718	3,553	3,553	3,553	3,553	3,553	3,553
Upgrade sections of INV 2742 & 2842 33kV to Colyer F	194									
Upgrade section of Kenington to Woodlands 11kV line	383									
	3,330	**3,813**	**4,714**	**3,453**	**3,582**	**3,582**	**3,582**	**3,582**	**3,582**	**3,582**

CAPEX: Asset Replacement and Renewal	2022/23	2023/24	2024/25	2025/26	2026/27	2027/28	2028/29	2029/30	2030/31	2031/32
Transformer Replacement	977	977	977	1,086	1,086	1,086	1,086	1,867	1,867	1,867
Ground Mount Platform Transformers	703	703	703	781	781	781	781			
11kV Line Replacement	5,914	5,914	5,914	6,656	7,583	7,583	7,583	7,583	7,583	7,583
Subtransmission Line Replacement	269	269	269	269	269	269	269	269	269	269
Zone Substation Minor Replacement	108	108	108	108	108	108	108	108	108	108
RTU Replacement	164	164	164	164	164	164	164	164	164	164
Mobile Regulator Control Replacement										
Relay Replacement	65	65	65	65	65	65	65	65	65	65
Communications Replacement	93	93	93	93	93	93	93	93	93	93
General Technical Replacement	41	41	41	41	41	41	41	41	41	41
ABS renewals	1,694	1,671	825	1,340	1,340	1,340	1,340	1,265		
Power Transformer Refurbishment	425	442	442	442	442	298	298	298	298	298
Orawia Substation Upgrade	701	701								
Makarewa Switchboard Replacement			217	2,027						
Bluff Switchboard Replacement			215	1,493						
Ripple Plant Upgrade	118									
Seaward Bush RTU, Arc Flash & Structure Replacemer										
RMU Renewals	244	161	161	161	161	161	161	161	322	161
Gore LV Link Box Renewals										
Pole Reinforcement	63	63	63	63	63	63	63	63	63	63
Condition Based Asset Replacements					5,841	5,841	5,841	5,841	5,841	5,841
LV Pillar Box Replacements and Refurbishments	363	363	363	363	363	363	363	363	363	363
33kV Oil Circuit Breaker Replacement	462	462	462	462	462	462	574			
Decommision Awarua substation and supply Sawmill at				1,835						
	12,403	**12,196**	**11,082**	**17,448**	**18,860**	**18,717**	**18,829**	**18,180**	**17,076**	**16,915**

CAPEX: Asset Relocations	2022/23	2023/24	2024/25	2025/26	2026/27	2027/28	2028/29	2029/30	2030/31	2031/32
Line Relocations	123	123	123	123	123	123	123	123	123	123
	123	**123**	**123**	**123**	**123**	**123**	**123**	**123**	**123**	**123**

CAPEX: Quality of Supply	2022/23	2023/24	2024/25	2025/26	2026/27	2027/28	2028/29	2029/30	2030/31	2031/32
Supply Quality Upgrades	348	348	348	348	348	348	348	348	348	348
Mobile Substation Site Made Ready	152		262							
Network Improvement Projects	129	129	129	129	129	129	129	129	129	129
	630	**478**	**740**	**478**	**478**	**478**	**478**	**478**	**478**	**478**

CAPEX: Legislative and Regulatory	2022/23	2023/24	2024/25	2025/26	2026/27	2027/28	2028/29	2029/30	2030/31	2031/32

CAPEX: Other Reliability, Safety and Environment	2022/23	2023/24	2024/25	2025/26	2026/27	2027/28	2028/29	2029/30	2030/31	2031/32
Earth Upgrades	3,217	3,217	3,217	1,721	1,721	1,721	1,721	1,721	1,721	1,721
Substation Safety	267									
Remote Area Power Supply					147	293	293	293	293	293
Hillside Protection Remediation	32									
Communications Projects	360	198	195	195	195	226	389	389	389	389
North Gore Move OH structure away from Road Fence	368									
Kennington Fibre install from Racecourse Rd	194									
	4,438	**3,415**	**3,412**	**1,916**	**2,063**	**2,240**	**2,403**	**2,403**	**2,403**	**2,403**

Total Network CAPEX	33,969	33,069	23,281	26,374	28,063	28,097	28,372	27,723	26,619	26,458

5. Lifecycle Planning

Development criteria, the subject of the previous section, determine the need for particular assets. Once this need has been established each asset must be managed throughout its lifecycle to create and maintain the fulfilment of the assets purpose as long as it is required and to minimise any adverse effects the asset might create.

5.1. Lifecycle Asset Management Processes

Following procurement of equipment and materials, assets are constructed or installed as per a design or network standard and commissioned through a process to ensure the asset is capable of operating as intended. The asset then enters its useful service life where it will often be operated over a considerable time period. Maintenance activities are generally undertaken throughout an assets operational life to support its continued reliable service for as long as it is economic to do so.

Lifecycle asset maintenance drivers:

- Support continued reliable service to customers
- Economic viability when compared to replacement
- Continued safety
- Operational efficiency
- Rate and extent of deterioration
- Criticality
- Probability of failure

At some point the asset will reach its end of life and is retired from service. Assuming the need remains the asset will be replaced while the retired asset must be disposed of appropriately. This process is outlined in Figure 3 below.

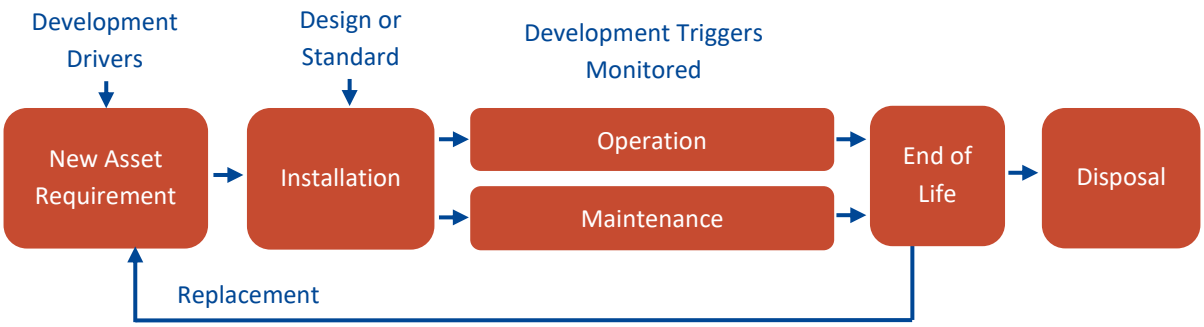

Figure 3: Asset Lifecycle

TPCL follows several asset management procedures to manage network assets throughout these lifecycle stages as referenced in Appendix 1.

Lifecycle asset maintenance drivers:

- Support continued reliable service to customers
- Economic viability when compared to replacement
- Continued safety

- Operational efficiency
- Rate and extent of deterioration
- Criticality
- Probability of failure

Installing Assets

The drivers for installation of new assets are as explained in the development section. Similarly the drivers requiring an asset on the network may change during the asset's operational life, and so may change the viability of maintaining or replacing an asset. Therefore these drivers need to be monitored beyond the installation to ensure the overall objective of providing an efficient cost effective service is achieved.

More complex assets such as a zone substation will require substantial design work to be completed, while standards are used to guide the construction and installation of more routine tasks such as the installation of a distribution transformer. Equipment and materials are procured as per the design or standard to be implemented and in line with TPCL's standardisation requirements (which are incorporated into designs and standards) as far as possible.

Assets are then installed to the design or standard followed by a commissioning process which is either specified in the design or (for standardised installations) using a commissioning checklist to ensure the asset has been installed and will function as intended prior to putting into service.

Operating TPCL's Assets

Operation of TPCL's assets predominantly involves simply letting the electricity flow from the GXPs to customer's premises year after year with occasional intervention when a trigger point is exceeded. However the workload arising from tens of thousands of trigger points is substantial enough to merit a dedicated control room. Altering the operating parameters of an asset such as closing a switch or altering a voltage setting involves no physical modification to the asset, but merely a change to the asset's state or configuration.

Operation of the network is effectively the service that TPCL's customers pay for, so it is the customer desire which forms the driver for the continuous operation of assets the optimal balance between reliability and cost.

Maintaining TPCL's Assets

Maintenance is primarily about replacing consumable components. Many of these components will be designed to "wear out" over an asset's design life and achieving the expected service life depends on such replacements. Examples of the way in which consumable components "wear out" include the oxidation or acidification of insulating oil, pitting or erosion of electrical contacts and loss or contamination of lubricants.

Continued operation of such components will eventually lead to failure as indicated in Figure 4. Exactly what leads to failure may be a complex interaction of parameters such as quality of manufacture, quality of installation, age, operating hours, number of operations, loading cycle, ambient temperature, previous maintenance history and presence of contaminants – note that the horizontal axis in Figure 4 is not simply labelled "time".

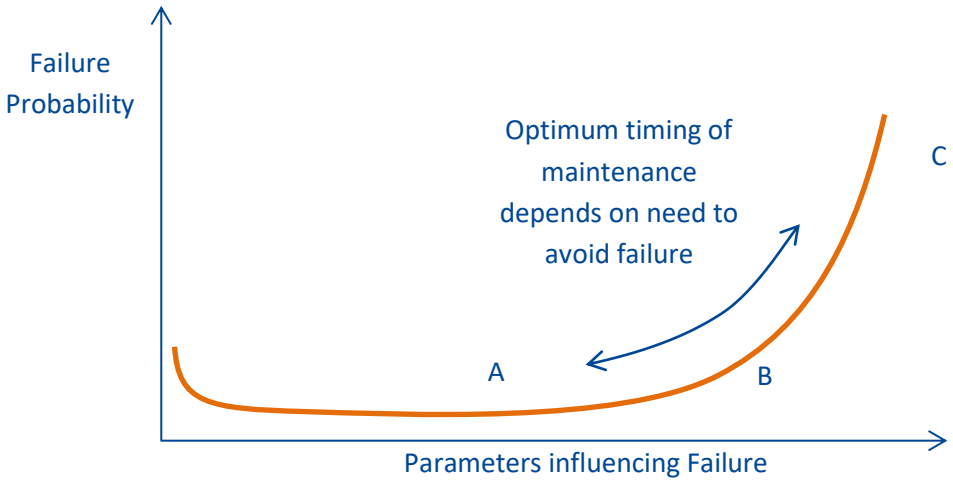

Figure 4 – Component Failure

This probability of failure curve can also be viewed as applicable to the overall asset life in which case neglecting maintenance could result in a considerable contraction along the "parameters influencing failure" axis. Conversely appropriate maintenance activities would stretch out the curve toward the expected design life; effectively resetting or pushing out the increasing probability of failure. There is often a significant asymmetry associated with consumables; for example replacing a lubricant may not significantly extend the life of an asset, but not replacing a lubricant could significantly shorten the asset's life.

Like all TPCL's other business decisions, maintenance decisions are made on cost-benefit criteria with the principal benefit being avoidance of supply interruption. Increasing maintenance costs (labour and consumables) over the asset's lifecycle taken together with the cost of discarding unused component life must be traded off against the desire to avoid failure. The optimal time for maintenance depends on an asset's criticality (impact of failure on customers) and ultimately on how much TPCL's customers are willing to pay to reduce probability of failure.

The practical effect of this is that assets supplying large customers or numbers of customers such as a 66/11 kV substation transformer may only be operated to point B in Figure 4 and condition will be extensively monitored to minimise the likelihood of supply interruption whilst assets supplying only a few customers such as a 15 kVA transformer will more than likely be run to failure represented as point C. In the extreme case of, say, turbine blades in an aircraft engine it would be desirable to avoid even the slightest probability of failure hence the blades may only be operated to point A.

Condition assessment is an important part of determining maintenance requirements, because many components do not deteriorate at a predictable age. Condition assessment allows deferral of maintenance cost for assets that are in good condition, and permits maintenance to be focused on the more deteriorated assets. Condition assessment involves inspections and testing to gather information about the condition of assets and their components, and can incorporate follow-up analysis (condition monitoring) to infer the condition of the asset through establishing trends in observable criteria.

By contrast some components are maintained at fixed intervals or operation counts. An example is replacing contacts in a circuit breaker which are pitted or eroded with each operation but are unable to be inspected without dismantling the circuit breaker (by which time the contacts can be replaced with a relatively small incremental cost).

As the value of an asset and the need to avoid loss of supply both increase, the company relies less and less on easily observable proxies for actual condition (such as calendar age, running hours or

number of trips) and more and more on actual component condition (through such means as dissolved gas analysis (DGA) of transformer oil).

Replacement and Renewal of TPCL's Assets

Renewals or refurbishments are more significant maintenance activities that generally focus on the non-consumable components of assets to achieve an extension to the originally expected life. This is typically less routine work and often represents a significant milestone in the life of an asset. Renewal may ultimately be part of a full asset replacement programme where the component replacements are "staggered" over time (a bit like "Grandpa's axe"). This would be the typical approach for an overhead line where the components (poles, cross-arms, and conductors) wear out and are replaced at different rates but the result is complete replacement of the original line, perhaps several times over as long as the line asset is required.

Ultimately an asset will reach end of life when it either fails or deteriorates to the point it becomes uneconomic to repair or maintain. This will occur when failure causes significant damage to the overall asset (highly likely for failures at distribution or subtransmission voltages) or when a "non-consumable" part of the asset has significantly aged or deteriorated, for example paper insulation in a transformer. The key factor being that it then becomes more cost effective to simply replace the asset.

Retiring and Disposing of TPCL's Assets

Retiring assets generally involves de-energising the asset and disconnecting it from the network before removal from site or abandoning in-situ (typical for underground cables). Removed assets must be disposed of in an acceptable manner particularly if it contains SF_6, oil, lead or asbestos. The asset will be removed from the regulatory asset base.

Key criteria for retiring an asset include:

- Its physical presence is no longer required (usually because a customer has reduced or ceased demand).
- It creates an unacceptable risk exposure, either because its inherent risks have increased over time or because emerging trends of safe exposure levels are declining. Assets retired for safety reasons will not be re-deployed or sold for re-use.
- There are no suitable opportunities for re-deployment after an asset has been replaced to increase capacity or where more economic options exist to create similar outcomes e.g. new technology offers a low cost maintenance free replacement.
- It becomes uneconomic to continue to maintain the asset as it is more cost effective to replace with a new asset.

5.2. Routine Corrective Maintenance & Inspection

Network assets are inspected routinely with the frequency dependant on the criticality of the assets and the outcome focussing on failure avoidance. Recognising that some deterioration is acceptable, inspections are intended to identify components which could lead to failure or deteriorate beyond economic repair within the period until the next inspection.

Deterioration is noted and may trigger corrective maintenance if economic, especially where deterioration can be "nipped in the bud", for example touching up paint defects before rust can take hold. Other forms of deterioration are unable to be corrected (or improved) for example pole cracks

or rotting and noting these issues may become a trigger for replacement or renewal depending on the extent of deterioration i.e. loss of structural integrity.

Inspections are not able to cover all assets such as cables buried underground and may be limited by the availability of outages or the added effort (labour cost) required to remove covers. Therefore for the most part routine inspections are limited to what can be viewed from a walkover of the assets.

Testing supplements network inspections and although it typically requires additional time and skilled staff, testing has strong advantages over visual inspection if cost effective. It is generally possible to gain greater detail around asset condition and often allows collection of condition data without the need to remove covers for inspection. Testing may be destructive or non-destructive. For example insulation resistance (IR) testing gives an ohmic value for insulation under test whereas very low frequency (VLF) testing is "pass-fail" where a pass proves integrity of insulation but a fail will cause a fault which needs to be repaired.

TPCL's Fleet Plans

A Fleet Plan is a description of how a specific asset or type of asset will be managed over its entire lifecycle. For each asset the material cost and time required to execute the following activities, need to be determined.

- Installation of the asset.
- Execution of each type of maintenance action, as well as the time interval between the activities.
- Decommissioning and disposal of the asset.

Through the development of Fleet Plans, TPCL can:

- determine capital funding requirements for the next 10-20 years;
- establish the number of people required, their skill levels and equipment needed to operate and maintain the electricity networks for the next 10-20 years;
- determine operational expenditure requirements for the next 10-20 years; and
- plan for accessing all network assets within a reasonable period for testing and maintenance.

These requirements are aggregated across the Annual Works Program for each CAPEX and OPEX category, allowing a "bottom-up" evaluation of the budgets. Detailed Fleet Plans for the ten most critical equipment categories have now been developed and will be live in the Asset Management Information System from April 2022. The other 80 fleet plans will be rolled out during the 2022/23 year.

TPCL's Maintenance Approach

Most technical equipment such as transformers, switchgear and secondary assets are maintained in line with manufacturer's recommendations as set out in their equipment manuals. Experience with the same types of equipment may provide reason to add additional activities to this routine maintenance. Visual inspections and testing also determine reactive maintenance requirements to maintain the serviceable life of equipment which are not routine but across a large asset base provide an ongoing need for additional maintenance resource.

Overhead line inspections are an economic means to prevent a large proportion of potential faults so the basic approach is to inspect these assets and perform preventative maintenance over the most cost effective period that achieves the desired service levels. A certain frequency of failure is accepted

on overhead lines where this remaining proportion of failures becomes uneconomic to repair. This recognises customers' acceptance of a low number of outages and the increasing cost for diminishing returns in attempting to reduce fault frequency.

As cables are underground they are unable to be inspected and testing is generally not cost effective and difficult to obtain accurate results to predict time to failure. Cables are therefore often run to failure. However as the relatively young cable network ages and fault frequency begins to increase a more preventative strategy will be employed based on testing to determine condition for critical cables.

In terms of cost efficiency, failures are relatively acceptable for lines and cables compared to the more technical assets. Significant serviceable life can be restored by repairing a fault due to the distributed nature of these assets and the relatively minor (i.e. localised) effect of faults. Asset criticality must allow for the occurrence of outages however increased security (redundancy) is often applied as more effective than attempting to determine time to failure and performing preventative maintenance.

Table 3 sets out the maintenance approaches applicable to each network asset category and the frequency with which these maintenance activities are undertaken.

Table 3: Maintenance Approach by Asset Category

Asset Category	Sub Category	Maintenance Approach	Frequency
Subtransmission	O/H	Condition Monitoring through periodic visual inspection.	5 yearly
		Testing of various pole structures, Tightening, repair or replacement of loose, damaged, deteriorated or missing components.	
	U/G	Generally run to failure and repair.	Annual
		Inspection of visible terminations as part of zone substation checks and otherwise opportunistic inspection if covers removed for other work. Sheath insulation IR tested.	
		Testing generally in conjunction with fault repair but may be initiated if anything untoward is noted during other inspections or work; may use IR, PI, TR, PD, VLF.	As occurs
	Distributed Sub Transmission Voltage Switchgear (ABSs)	Condition Monitoring through periodic visual inspection.	5 yearly
		Tightening, repair or replacement of loose, damaged, deteriorated or missing components.	
		Lubrication of moving parts.	
Zone Substations	Sub Transmission Voltage Switchgear	Condition Monitoring through periodic visual inspection checking for; operation count, gas pressure, abnormal or failed indications and general condition.	Monthly
		Testing; Contact Resistance, Partial Discharge, Insulation Resistance, CB operation time, Cleaning of contacts, Thermal Resistivity viewed soon after unloading, VT/CT IR and characteristics.	5 Yearly
		Corrective maintenance as required after any concerning inspection or test results.	As discovered
	Power Transformers	Condition monitoring through periodic inspections.	Monthly
		Winding resistances, Insulation resistance, Function checks on auxiliary devices (Buchholz, pressure relief, thermometers).	Annual
		Tap changer servicing; mechanism and contacts inspected – replacements as necessary, DC resistance across winding each tap, diverter resistors resistances	Operation Count
		Predictive maintenance - oil analysis (dissolved gasses, furan) to estimate age and identify internal issues arising	Bi-Annual

Asset Category	Sub Category	Maintenance Approach	Frequency
		or trends; frequency increased if issues and trends warrant. Oil processed as necessary.	
		Clean up and repair of corrosion, leaks etc. and replacement of deteriorated or damaged components. Replacement of breathers when saturated.	As discovered
		Paper sample may be taken to estimate age for aged transformers in critical locations at Engineer's instruction or otherwise during major refurbishment work at unit's half-life.	Half life
		Swept frequency test at start of life and after significant events such as relocation, repaired fault, refurbishment done to check for internal movement of components.	After Significant Event
	Distribution Voltage Switchgear	Condition Monitoring through periodic visual inspection checking for; operation count, gas pressure, abnormal or failed indications and general condition.	Monthly
		Testing; Contact Resistance, Partial Discharge, Insulation Resistance, CB operation time, Cleaning of contacts, Thermal Resistivity viewed soon after unloading, VT/CT IR and characteristics.	5 Yearly
		Corrective maintenance as required after any concerning inspection or test results.	Non-periodic
	Other (Buildings, RTU, Relays, Batteries, Meters)	Monthly sub checks include inspection of auxiliary and other general assets for anything untoward; structures, buildings, grounds and fences for structural integrity and safety and general upkeep; rusting, cracked bricks, masonry or poles and weeds etc. Maintenance repairs and general tidying as necessary.	Monthly
		Protection relays are tested typically with current injection to verify operation as per settings.	5 yearly
		Any alarms or indications from electronic equipment or relays reset and control centre notified for remediation.	
		Meters recertified by external technicians as regulations require.	
		Otherwise any other equipment visually inspected for anything untoward.	Non-periodic
Distribution Network	O/H	Condition Monitoring through periodic visual inspection.	5 yearly
		Testing of various pole structures, Tightening, repair or replacement of loose, damaged, deteriorated or missing components.	
	U/G	Generally run to failure and repair.	Reactive or opportunistic
		Inspection of visible terminations as part of zone substation checks and otherwise opportunistic inspection if covers removed for other work.	5 yearly if viable
		Testing generally in conjunction with fault repair but may be initiated if anything untoward is noted during other inspections or work; may use IR, PI, TR, PD, VLF.	
	Distributed Distribution Voltage Switchgear (ABSs)	Condition Monitoring through periodic visual inspection.	5 yearly
		Tightening, repair or replacement of loose, damaged, deteriorated or missing components.	
		Function tests to verify operation as per settings; for any switchgear controlled by relays.5	
Distribution Substations	Distribution Transformers	Condition monitoring through periodic inspections. Infrared thermal camera inspection units 500kVA and larger.	6 monthly or if <150kVA
		Clean up and repair of corrosion, leaks etc. Some units have breathers; replaced when saturated.	As discovered
		Winding resistances, Insulation resistance for older units if shut down allows.	Opportunistic
			Non-Periodic

Asset Category	Sub Category	Maintenance Approach	Frequency
		DGA for critical end of life units.	
	Distribution Voltage Switchgear (RMUs)	Condition monitoring visual inspection to assess deterioration or corrosion. Some minor repairs may be made but generally inspection determines when replacement will be required. Threshold PD tests to identify significant partial discharge.	6 monthly
		Periodic servicing undertaken including wipe down of epoxy insulation and oil replacement in critical switchgear. Some removed oil tested for dielectric breakdown as occasional spot check of general condition.	5-10 yearly
	Other	Inspection of enclosures for structural integrity and safety compromised by rusting or cracked brick or masonry. O/H structures included in distribution network inspections.	6 monthly
LV Network	O/H	Condition Monitoring through periodic visual inspection. Tightening, repair or replacement of loose, damaged, deteriorated or missing components.	5 yearly
	U/G	Run to failure and repair.	Reactive
	Link and Pillar Boxes	External inspection for damage, tilting, sinking etc. Internal components run to failure and repair. Corrosive lid replacement with alternative plastic units. Some opportunistic inspections when opened for other work.	5 yearly
Other	SCADA & Communications	Generally self-monitored with alarms raised for failures or downtime. 24/7 control room initiate response.	Reactive
	Earths	Five yearly inspections to check locational risk, check for standard installation and any corrosion, deterioration or loosening of components. Testing is done to confirm connection resistances and electrode to ground resistance is sufficiently low.	5 yearly
	Ripple Plant	Inspection along with other assets at GXP for signs of deterioration or damage of components; oil leaks, corrosion etc. Reactive remedial actions will follow for any issues found.	Monthly
	Vegetation	**Subtransmission lines** will be inspected every year with vegetation control work issued as a result to reflect their importance, load and customer numbers,	Yearly
		MV and LV lines will be inspected every 5 years, by the vegetation contractor and by the Network Inspection teams, resulting in an inspection on an average 2.5 years basis and the issue of work packs for the control work.	2.5 yearly

Maintenance and Inspection Programmes

Budget descriptions for routine corrective maintenance and inspection activities are set out in Table 4 and forecasts are provided in Table 10 at the end of this section. These budgets tend to be ongoing at similar levels year after year but may be adjusted from time to time to allow for improvements in maintenance practice.

Table 4: Routine and Corrective Maintenance and Inspection Budget Descriptions

Budget	Description	Expenditure Range/Type
Routine Distribution Inspections	Five yearly network inspections (20% inspected annually), other routine tests and minor maintenance works on distribution assets.	Cost Under $1.5M on-going; OPEX

Budget	Description	Expenditure Range/Type
Distribution Routine Maintenance	Generally reactive work undertaken to correct issues found during the routine distribution inspection. Also a general budget for all minor distribution work.	Cost Under $0.5M on-going; OPEX
Distribution Earthing Maintenance	Generally reactive work undertaken to correct issues found during the routine inspection and testing of earthing systems.	Cost Under $0.7M in 2021/22 & 2022/23 then Under 0.5M on-going; OPEX
Distribution Corrective Maintenance	Slightly more extensive maintenance than the routine maintenance above.	Cost Under $0.4M on-going; OPEX
BS Communications Routine Inspection and Checks	Ventia undertakes routine maintenance inspections on the communications equipment.	Cost Under $0.2M on-going OPEX
Technical Routine Inspections & Checks	Routine inspection and testing of assets at zone substations. Includes such things as oil DGA, breakdown, moisture and acidity, operation counts, protection testing etc. Also covers responses to maintenance triggers, such as oil processing or recalibration of relays.	Cost Under $1.0M on-going; OPEX
Technical Routine Maintenance	Routine maintenance at zone substations such as grounds, fence and building maintenance, rust repair and paint touch-ups. Routine maintenance at distribution substation assets such as cleaning, paint touch-ups and enclosure repairs. Routine maintenance for Ring Main Units such as cleaning, paint touch-ups and enclosure repairs. Includes reactive work undertaken to correct issues found during the routine technical inspection. Also a general budget for all minor technical work.	Cost Under $1.5M on-going; OPEX
Technical Corrective Maintenance	Correcting defects found in equipment	Cost under $0.25M on-going OPEX
Partial Discharge Survey	Routine partial discharge condition monitoring surveying of subtransmission cables, terminations and equipment to identify abnormal discharge levels before failure occurs.	Cost Under $0.1M on-going; OPEX
Infra-Red Survey	Routine Infra-Red condition monitoring survey of bus-work, connections, contacts etc. for abnormal heating as indication of poor electrical contact between current carrying components which may lead to voltage quality issues and/or failure of equipment.	Cost Under $0.1M on-going; OPEX
Supply Quality Checks	Investigations into supply quality which are generally customer initiated.	Cost Under $0.1M on-going; OPEX
Spare Checks and Minor Maintenance	A budget for checks to confirm what equipment is kept in spares and perform minor maintenance required to ensure spares are ready for service.	Cost Under $0.1M on-going; OPEX

Budget	Description	Expenditure Range/Type
Connections Minor Maintenance	Undertake minor maintenance on customer connections equipment.	Cost Under $0.2M on-going from 2021/22; OPEX
RAPS Maintenance	A new budget for the maintenance of remote area power supplies	Cost Under $0.1M ongoing from 2021/22; OPEX
Earthing Inspections	Routine testing of earthing assets and connections to ensure safety and functional requirements are met completed for all earths on a five yearly basis	Cost Under $0.5M on-going from 2021/22; OPEX

Systemic Issues

One potential systemic issue has been identified. Grey porcelain insulators on EDE Air Break Switches manufactured between 1998 and 2014 have a potential defect which can cause the insulator to crack and break into pieces which can fall when the switch is operated. An appropriate remedial action program have been initiated from 2019/20 to mitigate, repair, or replace the affected ABS's.

A second potential issue is the possibility of moisture ingress in the 33kV Eaton Cooper circuit breakers. The typical construction of the circuit breaker is a single mould rigid steel tank with a mounted head. An O-ring gasket is used to prevent moisture ingress between the tank and head and bolted securely. Six Porcelain bushings are secured on the head with bushing gaskets to prevent moisture ingress. The tank is filled with oil to provide adequate electrical insulation between active/live parts and the tank and lid itself. Moisture ingress have been found within the oil, where it is absorbed by a barrier board used to mount the 33kV trip coil connections. This result in a compromised insulation withstand level within the breaker. A remedial action plan, including more regular testing and maintenance, in conjunction with the replacement of the breakers from 2021/22 financial year are being implemented.

Examples of past investigations and outcomes are shown below. Some of these examples represent learnings from issues found on other networks managed by PowerNet but which are common to TPCL network.

- Kidney strain insulators: Replaced with new polymer strains.
- DIN LV fuses: Sourced units that can be used outdoor.
- Parallel-groove clamps: Replaced with compression joints.
- Non-UV stabilised insulation: Exposed LV now has sleeve cover, with new cables UV stabilised.
- Opossum faults: Extended opossum guard length.

5.3. Asset Replacement and Renewal

The overall objective for replacement and renewal programmes is to get the most out of the network assets by replacing assets as close as possible to their economic end of life. This is balanced by the need to manage workforce resources in the short term and delivery of desired service levels over the long term.

Inspection and testing programmes identify assets that are reaching the end of their economic life while critical assets may be replaced on a fixed time basis. For example, 11kV switchboards at zone

substations are replaced at the end of their expected 45 year life. Less critical assets or assets provided with redundancy as part of security arrangements may be run to failure and replaced reactively. Assets such as cables may be run to failure several times and repaired before the fault frequency increases to a point that complete replacement is more economic. This approach requires monitoring of failure rates.

Apart from whole of lifecycle cost analysis there are several additional drivers for replacement (though they can often be reduced to a cost analysis) including operational or public safety, risk management, declining service levels, accessibility for maintenance, obsolescence and new technology providing options for additional features or alternative solutions. Replacement of assets may also be heavily influence by the development drivers discussed in section Development Criteria.

Innovations That Defer Asset Replacement

There are a number of innovations that TPCL uses to defer asset replacement. These include;

- Thermal (Infrared) and Partial Discharge (Corona) camera inspections of Zone Substation equipment
- Mid-life refurbishment of power transformers
- Dissolved Gas Analysis (DGA) of large distribution transformers
- Thor hammer analysis of poles
- Automation of switchgear to enable faster restoration in the event of fault sets out the approach to making decisions around when to undertake replacements or renews applicable to each network asset category.

Table 5: Replacement and Renewal Decisions by Asset Category

Asset Category	Sub Category	Replacement and Renewal Decision Approach
Subtransmission	O/H	Reactive replacements after failure due to external force. Poles replaced when structural integrity indicated as low by pole scan or visual inspection. Generally poles cross arms, pins, insulators, binders and bracing etc. replaced when inspection indicates deterioration that could cause failure prior to next inspection and maintenance is uneconomic. Conductor replaced when reliability declines to an unacceptable level or repairs become uneconomic.
	U/G	XLPE cables replaced when reliability declines to an unacceptable level or repairs become uneconomic. Oil cables may be damaged beyond economic repair depending on nature of failure.
	Distributed Subtransmission Voltage Switchgear (ABSs)	When inspection indicates deterioration sufficient to lose confidence in continued reliable operation and maintenance is considered uneconomic.
Zone Substations	Zone Substation HV Switchgear	Replaced at end of standard life (fixed time), may be delayed in conjunction with condition monitoring to achieve strategic objectives. Significant damage from premature failure could require replacement.

Asset Category	Sub Category	Replacement and Renewal Decision Approach
	Power Transformers & Regulator Transformers	After failure causing significant damage that is not economic to repair. Paper, Furan or DGA analysis indicating insulation at end of life. Tank and fittings deteriorating, lack of spare parts and not economic to maintain for aged units. Not economic to relocate (transport and installation costs) after aged transformers displaced e.g. for a larger unit.
	Medium Voltage Switchgear	Replaced at end of standard life (fixed time), may be delayed in conjunction with condition monitoring to achieve strategic objectives. Significant damage from premature failure could require replacement.
	Other (Buildings, RTU, Relays, Batteries, Meters)	Instrumentation/Protection at end of manufacturers stated life (fixed time) or when obsolete/unsupported or otherwise along with other replacements as economic e.g. protection replaced with switchboard or transformer. Batteries replaced prior to the manufacturers stated life expectancy (typically 10 years) or on failure of testing. Buildings and fences when not economic to maintain after significant accumulating deterioration or seismic resilience concerns. Bus work and conductors when not economic to maintain. Greater than Standard Life and maintenance required.
Distribution Network	O/H	Reactive replacements after failure due to external force. Poles replaced when structural integrity indicated as low by pole scan or visual inspection. Generally poles cross arms, pins, insulators, binders and bracing etc. replaced when inspection indicates deterioration that could cause failure prior to next inspection and maintenance is uneconomic. Conductor replaced when reliability declines to an unacceptable level or repairs become uneconomic.
	U/G	XLPE or paper lead cables replaced when reliability declines to an unacceptable level or repairs become uneconomic.
	Distributed Medium Voltage Switchgear	Replaced at end of standard life (fixed time), may be delayed in conjunction with condition monitoring to achieve strategic objectives. Significant damage from premature failure could require replacement.
Distribution Substations	Distribution Transformers	Often replaced if rusting is advanced or other deterioration/damage is significant and maintenance becomes uneconomic. Otherwise units generally run to failure but transformers supplying critical loads may be replaced early based age or as part of other replacements at site. Units removed from service <100kVA and older than 20yrs are scrapped otherwise tested and if satisfactory recycled as stock.
	Distribution Voltage Switchgear (RMUs)	Replaced at end of standard life (fixed time), may be delayed in conjunction with condition monitoring to achieve strategic objectives. Significant damage from premature failure could require replacement.

Asset Category	Sub Category	Replacement and Renewal Decision Approach
	Other	Instrumentation/Protection at end of manufacturers stated life (fixed time) or when obsolete/unsupported or otherwise along with other replacements as economic e.g. protection replaced with switchboard or transformer. Batteries replaced prior to the manufacturers stated life expectancy (typically 10 years) or on failure of testing. Enclosures not economic to maintain after significant accumulating deterioration or seismic resilience concerns.
LV Network	O/H	Reactive replacements after failure due to external force. Poles replaced when structural integrity indicated as low by pole scan or visual inspection. Generally poles cross arms, pins, insulators, binders and bracing etc. replaced when inspection indicates deterioration that could cause failure prior to next inspection and maintenance is uneconomic. Conductor replaced when reliability declines to an unacceptable level or repairs become uneconomic.
	U/G	Generally run to failure. Replaced when condition declines to an unreliable level e.g. embrittlement of insulation.
	Link and Pillar Boxes	Replaced if damaged or deterioration is advanced and could lead to failure before next inspection (or if public safety concerns exist).
Other	SCADA & Communications	RTUs or radios at end of manufacturers stated life (fixed time) or when obsolete/unsupported or otherwise along with other replacements as economic.
	Earths	Replaced when inspections find non-standard arrangements, deteriorated components or test results are not acceptable.
	Ripple Plant	Becoming obsolete as smart meters are installed across the network. Run to failure if security provided by backup plant.

Asset Replacement and Renewal Projects

Asset replacement and renewal projects that are not ongoing are described in Table 6, Table 9,

Table 7 and Table 8 often represent one-off replacement or renewal of significant assets that have reached end of life or a significant milestone in its life. Other projects may target a number of assets of similar age that will be replaced or renewed as part of short or medium term programme.

Table 6: Current (Year 1) Asset Replacement and Renewal Projects

Project and Description	Cost and Timing
Seaward Bush RTU, Arc Flash & Structure Replacement: The Seaward Bush substation has a number of secondary systems which were planned to be replaced as part of a Power Transformer renewal. The transformers have now been condition assessed in consultation with a transformer expert as having many years' service life remaining. This has led to the transformer renewal being removed as a project. The other renewal activities (RTU, arc flash and 33kV structure) are still planned and are combined in this project. The existing overhead 33kV bus structure will be replaced with two 33kV ring main units (RMUs) and short 33kV cable runs to poles adjacent to the substation. The 11kV switchboard will be retrofitted with arc flash detection sensors and new incomer CB protection relays to enable arc flash protection. The obsolescent Harris RTU will also be replaced with an SEL Axion RTU. Design and major	CAPEX Cost under $0.6M for 2021/22 a

Project and Description	Cost and Timing
equipment purchase are being completed in 2020/21 with construction being completed over a two year period ending in 2021/22.	
Seaward Bush project completed in 2021/22	
Mobile Regulator Control Replacement: Replacement of control system of mobile regulator. Scope to include new control, voltage regulating relay and DC supply.	CAPEX Cost Under $0.1M 2021/22
Mobile Regulator Control Replacement project completed in 2021/22	
Communications Replacement: Equipment is becoming obsolete with manufacturers' ending support. This project will replace the total communications network with a modern scheme to provide the required communication for TPCL. The chosen scheme will be a combination of higher speed digital microwave radio (DMR) to replace the existing microwave links, and high speed point-to-multipoint broadband radio to zone substations. The overall aim is to achieve a minimum of 1Mbps (Megabit-per-second) speed over Internet Protocol to all of TPCL's zone substations.	CAPEX Cost $0.5M for 2020/21 & under $0.1M per annum 2021/22 to 2030/31
Gore Ripple Plant Upgrade. The existing Gore Injection controller, which connects back via UHF radio to the Main Frame Injection Controller at TPI, is the oldest in the fleet of injection station controllers. The existing controller needs to be replaced to improve the Ripple Plant with the Invercargill Control system.	CAPEX Cost Under $0.2M 2021/22
Gore Ripple Plant Upgrade has been extended to other units after the successful work in Gore this year. Cost $0.2M 2022/23	
Gore LV Link Box Renewals: Replacement of underground link boxes in Gore which have deteriorated with age or have been damaged and are unfit for service.	CAPEX Cost Under $0.2M 2021/22
Gore LV Link Box Renewals were completed in 2021/22	

Table 7: Planned (Year 2 - 5) Asset Replacement and Renewal Projects

Project and Description	Cost and Timing
Orawia Substation Upgrade: The Orawia Substation control room building and transformer and overhead bus structures were identified as being at risk during seismic investigation. This project will replace the control room and make changes to the weight loading on the bus structures. Loading will be reduced by replacing pole mounted equipment with ground mounted equipment and replacing overhead conductor bus with either cable or conductor supported on dedicated equipment stands.	CAPEX Cost Under $1.5M per annum 2022/23-2023/24
Makarewa Switchboard Replacement: The Makarewa 11kV Switchboard reaches its expected life of 45 years in 2025/26. Design to be completed in 2024/25 ahead of replacement in 2025/26.	CAPEX $0.1-$2.0M per annum 2024/25-2025/26
Bluff Switchboard Replacement: The Bluff 11kV Switchboard reaches its expected life of 45 years in 2025/26. Design to be completed in 2024/25 ahead of	CAPEX

Project and Description	Cost and Timing
replacement in 2025/26. The new CB6 (installed in 2015) for connection of Flat Hill wind farm will be retained.	$0.1-$1.5M per annum 2024/25-2025/26

Table 8: Considered (Year 6 – 10) Non-routine Replacement and Renewal Projects

Project and Description	Cost and Timing
Awarua Substation replacement: Awarua substation is a 5MVA, 33/11kV substation providing supply to a single ICP. The substation yard and HV equipment, including transformers have been identified for refurbishment and/or replacement. The new supply from Colyer Road substation is to supply the ICP and decommission the Awarua substation.	CAPEX Cost Under $2M 2025/26

Ongoing Replacement and Renewal Programmes

The remaining replacement and renewal budgets are for ongoing work that tends to require about the same expenditure year after year. These budgets are listed and described in Table 9 and expenditure forecasts are provided in Table 2 (CAPEX) and

Table 10 (OPEX). A redefinition of work programmes to more closely align to Information Disclosure Determination definitions has resulted in a transfer of some distribution work from Routine Maintenance to Replacement & Renewal. A one-off adjustment in 2018/19 adapts the OPEX budgets below for a change in the financial treatment of these costs under a revised network management agreement.

Table 9: Replacement and Renewal Programmes

Budget	Description	Expenditure
Transformer Replacement	On-going replacements of distribution transformers, both pole and ground mounted, which are generally identified during distribution inspections and targeted inspections based on age. Some removed units are refurbished.	Annual CAPEX Cost Under $2M per annum
11kV Line Replacement	On-going replacements of both medium and low voltage line assets. These are identified through routine inspection. As work is planned based on feeders, this renewal and refurbishment covers both distribution lines, cables, dropouts and ABS's. This budget also covers • Red tagged pole replacement • Increasing road crossing height • Minor distribution renewals and upgrades	Annual CAPEX Cost Under $7.0M per annum
Subtransmission Line Replacement	On-going replacements of subtransmission line assets. These are identified through routine inspection.	Annual CAPEX Cost Under $0.2M per annum
Subtransmission Line Replacement has been increased to reflect ongoing maintenance requirements. Cost under $0.3M per year ongoing		
Zone Substation Minor Replacement	Minor work discovered during previous years inspections are combined by sites into projects. Covers on-going replacement of minor components at zone substations such as LTAC panels and battery banks.	Annual CAPEX Cost Under $0.2M per annum

Budget	Description	Expenditure
RTU Replacements	This project will replace an average of three sites over each 2 year period. The focus is on the Harris RTU's. Some substation projects will include the RTU replacement and have costs included. i.e. Seaward Bush, Lumsden. This was chosen as the present units are becoming unreliable and full remote operation is required to meet the service levels. Rate of renewal could be increased if unreliability reaches unacceptable levels.	Annual CAPEX Cost Under $0.2M per annum
Relay Replacement	On-going testing and fault investigation sometimes highlight protection and control relays that are not performing as desired; this programme allows renewal of these with modern protection and control relays (includes Voltage Regulating Relays) Some replacements will occur with other replacement projects, i.e. Switchboard replacement projects	Annual CAPEX Cost Under $0.1M per annum
Communication Replacement	Budget to allow for the replacement of remote radio devices providing communication to selected distribution equipment.	Annual CAPEX Cost Under $0.1M per annum
General Technical Replacement	General replacement of technical items at Zone Substations such as DC systems and batteries.	Annual CAPEX Cost Under $0.1M
ABS Renewal Works:	The replacement of all grey porcelain ABS's installed between 1998 and 2014. Due to water ingress, insulators tend to crack and become unsafe during operation. The project will replace all identified units with either remote controlled load break or manual controlled air break switches. General replacement of other units identified as per the Asset Management program.	CAPEX Cost Under $2M per annum 2021/22 to 2029/30
Power Transformer Refurbishment	A budget to allow refurbishment work on large power transformers. Generally this work only insures that the power transformer will achieve its expected life.	Annual CAPEX Cost varies but generally between $0.3-1M per annum
RMU Renewals	Ongoing replacements of RMU's identified during site investigations and remedial maintenance. Consideration of equipment age (end of life) and performance considered.	Annual CAPEX less than $0.5M
Pole Reinforcement	On-going reinforcement of red tagged wooden poles identified with the MV and LV networks. Additional reinforcement of individual pole structures extend pole useful life and mechanical integrity for up to 15 years.	Annual CAPEX less than $0.5M per annum
Pole Reinforcement was completed on a number of poles during the year, but the numbers were limited by the pole configurations and often by the complete pole replacement being a more sensible option. Cost under $0.1M per year ongoing		
LV Pillar box replacement	Budget allowed for replacement of identified pillar boxes and the conversion of steel lids to non-conductive plastic units.	Annual CAPEX less than $1M per annum
33kV Oil Circuit Breaker Replacement	Replacement of high voltage circuit breakers identified within zone substations.	Annual CAPEX less than $0.7M between 2021/22 and 2028/29

Budget	Description	Expenditure
General Distribution Refurbishment	Refurbishment works for plant other than that located at distribution substations which won't impact on the valuation of the distribution asset. Covers items like crossarms, insulators, strains, re-sagging lines, stay guards, straightening poles, pole caps, ABS handle replacements etc.	Annual OPEX Cost Under $1M per annum
Subtransmission Refurbishment	A budget to allow refurbishment work that doesn't impact on the valuation of the subtransmission assets. This covers items like crossarms, insulators, strains, re-sagging lines, stay guards, straightening poles, pole caps, ABS handle replacements etc.	Annual OPEX Cost Under $0.2M
Zone Substation Refurbishment	A budget to allow refurbishment works that won't impact on the valuation of the substation assets. Covers items like earth sticks, safety equipment, buildings, battery systems etc.	Annual OPEX Cost Under $0.1M
Power Transformer Refurbishment	A budget to allow refurbishment works that won't impact on the valuation of the power transformers. Covers items like painting.	Annual OPEX Cost Under $0.1M
Transformer Refurbishment	Refurbishment of distribution transformers such as rust repairs, paint touch-up, oil renewal, replacement of minor parts such as bushings, seals etc.	Annual OPEX Cost Under $0.1M

5.4. TPCL's Forecast Operation Expenditure

The forecast operational expenditure for TPCL is shown in Table 10. These figures are also provided in the information disclosure schedule 11b included in Appendix 3. Two further categories not described earlier complete TPCL's forecasted operational expenditure budget as follows.

Vegetation Management

Annual tree trimming in the vicinity of overhead network is required to prevent contact with lines maintaining network reliability. The first trim and felling of trees has to be undertaken at TPCL's expense as required under the Electricity (Hazards from Trees) Regulations 2003.

TPC's future approach is to only pay for first trim or felling while customers are responsible for all further trimming and or the felling of vegetation. The existing practice of offering a second trim to owners where vegetation encroaches within the growth limit zone will not be offered in future. PowerNet will remove vegetation where owners submit a valid No interest Notice. A lifecycle asset management plan will be developed for all vegetation and be managed through Maximo.

External service providers are used to capture field data annually. All data is to be included in Maximo and GIS, where an existing data base exist. Based on the site condition assessment, a risk profile is to be developed from where PowerNet will schedule site activities to trim and/or remove vegetation, currently performed by approved service providers.

Current vegetation management practices utilised by PowerNet, follows industry best practice guidelines and legislative regulations. Draft proposals, including an increased MAD requirement are being considered and will be implemented once ratified and approved by industry. The possibility exists that restrictive conditions due to increased MAD requirements could impact on costs to manage vegetation effectively.

This OPEX cost is budgeted at under $1.15M per annum ongoing.

Service Interruptions and Emergencies

This budget provides for the provision of staff, plant and resources to be ready for faults and emergencies. Fault staff respond to make the area safe, isolate the faulty equipment or network section and undertake repairs to restore supply to all customers. Any follow-up actions necessary to make further repairs are charged to the appropriate Reactive Maintenance budget.

This OPEX cost is budgeted at less than $4million per annum.

Table 10: TPCL's Forecast Operational Expenditure ($000 – constant 2020/21 terms)

OPEX: Asset Replacement and Renewal	2022/23	2023/24	2024/25	2025/26	2026/27	2027/28	2028/29	2029/30	2030/31	2031/32
General Distribution Refurbishment	550	550	550	615	615	615	615	615	615	615
Subtransmission Refurbishment	89	89	89	89	89	89	89	89	89	89
Zone Substation Refurbishment	66	66	66	66	66	66	66	66	66	66
Power Transformer Refurbishment	50	50	50	60	60	60	60	60	60	60
Transformer Refurbishment	22	22	22	22	22	22	22	22	22	22
Locks and Security	65	65	65	20						
	842	**842**	**842**	**872**	**852**	**852**	**852**	**852**	**852**	**852**

OPEX: Vegetation Management	2022/23	2023/24	2024/25	2025/26	2026/27	2027/28	2028/29	2029/30	2030/31	2031/32
Vegetation Management Vegetation Inspection and Admin	1,150	1,150	1,150	1,150	1,150	1,150	1,150	1,150	1,150	1,150
	1,150	**1,150**	**1,150**	**1,150**	**1,150**	**1,150**	**1,150**	**1,150**	**1,150**	**1,150**

OPEX: Routine and Corrective Maintenance and Insp	2022/23	2023/24	2024/25	2025/26	2026/27	2027/28	2028/29	2029/30	2030/31	2031/32
Routine Distribution Inspections	1,229	1,229	1,229	1,256	1,256	1,255	1,255	1,255	1,255	1,255
Distribution Routine Maintenance	429	429	429	429	429	429	429	429	429	429
Distribution Earthing Mtce	45	45	45	86	86	86	86	86	86	86
Distribution Corrective Maintenance	246	246	246	259	259	259	259	259	259	259
BS Communications Routine Inspection and Checks	70	70	70	108	108	108	108	108	108	108
Technical Routine Inspections & Checks	525	525	525	551	551	551	551	551	551	551
Technical Routine Maintenance	1,266	1,266	1,266	1,330	1,330	1,330	1,330	1,330	1,330	1,330
Technical Corrective Maintenance	180	180	180	180	180	180	180	180	180	180
Infrared Survey	20	20	20	21	21	21	21	21	21	21
Partial Discharge Survey	50	74	74	74	77	77	77	77	77	77
Supply Quality Checks	16	16	16	16	16	16	16	16	16	16
Spares Checks and Minor Maintenance	10	10	10	18	18	18	18	18	18	18
Connections Minor Maintenance	117	117	117	123	123	123	123	123	123	123
RAPS maintenance	5	5	5	5	5	16	18	21	23	26
Earthing Inspections										
	4,208	**4,232**	**4,232**	**4,456**	**4,459**	**4,469**	**4,472**	**4,474**	**4,477**	**4,479**

OPEX: Service Interruptions and Emergencies	2022/23	2023/24	2024/25	2025/26	2026/27	2027/28	2028/29	2029/30	2030/31	2031/32
Depot Location Recovery Fixed Fee	225	225	225	225	225	225	225	225	225	225
Incident Response - Distribution - Unplanned	3,325	3,325	3,325	3,325	3,325	3,325	3,325	3,325	3,325	3,325
Incident Response - Communications - Unplanned	66	66	66	66	66	66	66	66	66	66
Incident Response - Technical - Unplanned	209	209	209	209	209	209	209	209	209	209
	3,825	**3,825**	**3,825**	**3,825**	**3,825**	**3,825**	**3,825**	**3,825**	**3,825**	**3,825**
Operational Expenditure Total	**10,025**	**10,048**	**10,048**	**10,303**	**10,286**	**10,296**	**10,298**	**10,301**	**10,303**	**10,306**

6. Risk Management

TPCL is exposed to a wide range of risks and utilises risk management techniques to keep risk within acceptable levels. This section describes the changes in the risk profile between 2021 and 2022.

6.1 Company related risks (general)

Significant company related risks that were identified are described in the next paragraphs.

COVID pandemic - Loss of key service providers; business operations disrupted

This risk manifested during 2020 when the COVID-19 virus caused a worldwide pandemic. The probability of this risk occurring was deemed "*Rare*", but it happened. The risk is now a "*Critical*" risk. However, in line with Central Government guidelines, Electricity Distribution is an essential service and work needs to continue. The following treatment responses are being implemented and followed.

- Adhere to government guidelines.
- Regularly update the PowerNet pandemic plan to be in line with government guidelines and ensure staff and contractors work to it.
- Supply chain management.
  - Continuously monitor critical suppliers and manufacturers to pre-empt any supply side issues.
  - Ensure sufficient stock levels of critical items and consumables, including safety equipment such as masks and disposable gloves.
  - Identify key contractors and negotiate availability agreements.
- Pre-order materials to meet delivery dates and hedge against further price increases.
- Contact tracing.
- Vaccination requirements

The mitigation measures mostly worked during the previous financial year, although lockdowns caused some delays in major projects and maintenance work. Major projects were delayed by the difficulties in getting imported equipment into New Zealand. Non-critical but nevertheless essential maintenance were postponed and the resultant backlog has not been fully cleared.

Cost increases

Increase in raw material costs

Markets have seen significant increases in the raw materials used to manufacture the equipment we use on the electricity distribution networks. This is shown in the following graphs:

Figure 5: International Copper Price

(Reference:https://markets.businessinsider.com/commodities/copper-price)

Oct 2020 6727 US$/ton
Oct 2021 9660 US$/ton
Increase: 43%

Figure 6: International Aluminium Price

(Reference: https://markets.businessinsider.com/commodities/aluminum-price)

Oct 2020 1870 US$/ton
Oct 2021 3063 US$/ton
Increase: 64%

The plastics used as isolating material have followed similar trends. Steel increased significantly between October 2020 and August 2921 but has since dropped back to 2% above 2020 prices.

This has led to suppliers implementing the following price increases:

Table 11: Supplier Increases

		Forecast Annual increase
AHH Wood	X-Arms	4%
BUSCK	Poles	10%
Transnet	Poles & O/Head Product	7%
ETEL	Transformers	16%
Copper Cable/Conductor		32%
Aluminium Cable/Conductor		28%
MV Switchgear		10%
Earthing		26%
LV Switchgear		10%
LUGS/LINKS/CONNECTORS		7%
Weighted Average Material Cost Increase[1]		17%

1. Weighted by the value of equipment purchased

Increase in shipping costs and delays in shipping

In addition to the increase in cost due to raw material, the cost of shipping has also increased by between 15% and 45%, depending on the origin and destination of equipment. Covid-19 restrictions at ports and in supplier countries are causing delays, equipment that would normally take 6 weeks to deliver, now has 6 a months delivery time. This is not only due to shipping restrictions, but as lockdown levels change in supplier countries, it affects production as factories are shut down and re-opened regularly.

The delays in getting imported material into New Zealand may have an effect on the timing of projects and may lead to a further restructure of the expenditure budgets.

Cyber Security

Cyber security events were detected and intentional damage was prevented by the IT security systems. There is however a notable increase in these types of events.

Industry Regulation

Possible events pertaining to industry regulation and that may have an increased impact from that anticipated in 2021 have been identified as the following.

Table 12: Industry Regulation Risks and Responses

Event	Likelihood	Consequence	Consequences and Responses
Uncompetitive Return on Investment	Likely	Major	• Cut cost to a level where reliability of supply will not materially deteriorate but will also not improve. • The material cost increases together with the unanticipated higher than planned labour and fuel cost increases necessitates cutting down on the physical amount of work to be done to stay within regulatory limits. This will have a long term detrimental effect on quality of supply.
Regulatory breaches	Possible	High	• Continue to contract PowerNet to meet regulatory requirements. • Ensure PowerNet has and operates to a Business Continuity Plan. • Implement ComplyWith to advise staff of compliance requirements
Inadequate Resource to execute required work	Possible	High	• PowerNet utilises internal staff allowing effective planning and management of recruitment training and retention of skilled staff. • Endeavour to provide a reasonably constant stream of work for key external contractors to assist in their continued viability. • A Covid-19 outbreak may cause a short to medium term staff shortage. A vaccination policy and a Covid-19 response framework has been developed to reduce both the consequence and the Likelihood of such an event occurring.

6.2 Asset Management Risks

The following risks specifically relating to Asset Management are materialising or have already materialised.

Table 13: Asset Management Risks

Category	Risk Title	Risk Cause	Worst Case Scenario	Treatment Plan Summary
Operational Performance	**Unavailability of critical spares**	Supply chain disruptions and factory shutdowns due to Covid-19	Inability to repair or maintain networks	Pre-order equipment Alternative suppliers Assist local suppliers to register as critical organisations
Operational Performance	**Loss of key critical service provider**	Major health event/pandemic has now materialised	Inability to build or maintain assets Service providers unable to service existing contracts	Improved identification of critical service providers Identify alternative service providers Diversify the workforce Train and grow internal workforce
Operational Performance	**Major event triggering storm gallery activation**	Increased frequency of wind, storm events	Delayed or limited provision of power to consumers Loss of ability to provide power to customers for extended periods	Develop improved contingency plans for network events
Financial	**Change to EDB Environment**	Equipment, fuel and labour cost increases directly or indirectly attributable to the Covid-19 pandemic	Insufficient funding to execute critical upgrades and maintenance	Increase testing of equipment and move more categories of equipment to a condition based maintenance or replacement regime

Health and Safety

Health and safety risk changes that were identified are listed below with treatment responses indicated in Table 14.

Changes in Regulations:

- The Tree Regulations as well as Traffic Management Regulations has become more complex to execute, leading to cost increases

Table 14: Health and Safety Risks

Event	Likelihood	Consequence	Responses
Changes in Safety Regulations	Certain	Major	• Outsource Vegetation Management • Outsource Traffic Management

6.3 System Risks

Changes in existing risks to the electricity system are described in the following sections.

Distribution Network

Switchgear

There are operating restrictions on some ring main units (RMUs) equipment. This is to prevent risks and to manage hazards associated with oil filled switchgear (as identified by incidents occurring in the wider industry). In addition, operating restrictions have also been placed on a specific batch of vacuum switchgear that have had some issues in a number of utilities.

Air Break Switches

TPCL has a large number of Air Break Switches (ABS) on the 11 kV overhead network. In recent years one type that utilises a locally sourced porcelain insulator has been failing with the potential to drop porcelain pieces onto the operator below, as well as causing a fault above. A project has been started to replace all the affected ABS units, but the project will take a number of years to complete and in the meantime there are operating restrictions on these affected ABSs.

6.4 Impact of decarbonisation initiatives

The NZ government has introduced initiatives to assist in the decarbonisation of the country. One of these initiatives is the Government Investment in Decarbonising Industry (GIDI) fund. This fund can be utilised for upgrading of electricity distribution networks where there is not enough capacity in the networks to support conversion from fossil fuel to electricity. The use of GIDI funding, together with the uncertainty about price and availability of biomass, has changed the economic feasibility of a number of projects. Electrification of plant has become more viable than conversion to biomass.

The TPCL supply area has significant potential for industrial load growth driven by decarbonisation. Many industries in the TPCL supply area use fossil fuel generated process heat. There are a number of enquiries for significant chunks of load in the area supplied by the North Makarewa substation, and a number of smaller enquiries in other areas. There are also possible wind generation options in the pipeline. Two of these projects have been committed to by the clients as they have received GIDI funding that expires in September 2023. These are Alliance and Matuara Valley Milk. These projects

have been included in the forecasts, but there are a number of other projects that are being considered. Should any of these projects materialise, it will change the forecast quite significantly.

These projects are also using most of the available spare capacity on the networks, increasing the difficulty of planning interruptions. Running the networks close to their limits may lead to interruptions due to short duration overloading, making it difficult to manage SAIDI and SAIFI.

TPCL shares Transpower infrastructure with Electricity Invercargill Limited and the growth in TPCL's customer base and loading may affect the reliability and quality of supply from Transpower.

6.5 Asset Criticality

The EEA Asset Criticality Guide defines Criticality as "A measure reflecting the relative seriousness of the Credible Consequences of Failure". The EEA guidelines are being operationalised within EIL.

The EEA guideline indicates that the plausible consequence of an asset failure next to a school or public facility is the same as when the same asset would be installed somewhere in a paddock. However the credible consequence of the asset failure in the first location is much higher than the credible consequence of the asset failing in the second location, so more intensive risk mitigation measures will be applied to the first asset.

To assist with classifying equipment in terms of criticality, a new layer has been incorporated into the GIS system that easily allows identification of critical equipment. This criticality is being incorporated into the Asset Management Information System.

Appendix 3 – Disclosure Schedules

Company Name	**The Power Company Limited**
AMP Planning Period	**1 April 2022 – 31 March 2032**

SCHEDULE 11a: REPORT ON FORECAST CAPITAL EXPENDITURE

This schedule requires a breakdown of forecast expenditure on assets for the current disclosure year and a 10 year planning period. The forecasts should be consistent with the supporting information set out in the AMP. The forecast is to be expressed in both constant price and nominal dollar terms. Also required is a forecast of the value of commissioned assets (i.e., the value of RAB additions)

EDBs must provide explanatory comment on the difference between constant price and nominal dollar forecasts of expenditure on assets in Schedule 14a (Mandatory Explanatory Notes).

This information is not part of audited disclosure information.

sch ref												
7		*Current Year CY*	*CY+1*	*CY+2*	*CY+3*	*CY+4*	*CY+5*	*CY+6*	*CY+7*	*CY+8*	*CY+9*	*CY+10*
8	for year ended	**31 Mar 22**	**31 Mar 23**	**31 Mar 24**	**31 Mar 25**	**31 Mar 26**	**31 Mar 27**	**31 Mar 28**	**31 Mar 29**	**31 Mar 30**	**31 Mar 31**	**31 Mar 32**
9	**11a(i): Expenditure on Assets Forecast**	**$000 (in nominal dollars)**										
10	Consumer connection	3,356	13,045	13,450	3,400	3,207	3,277	3,349	3,423	3,498	3,575	3,654
11	System growth	1,925	3,330	3,931	4,991	3,744	3,969	4,057	4,146	4,237	4,330	4,426
12	Asset replacement and renewal	13,823	12,403	12,574	11,734	18,918	20,899	21,197	21,793	21,505	20,643	20,898
13	Asset relocations	202	123	127	130	133	136	139	142	145	148	152
14	Reliability, safety and environment:											
15	Quality of supply	418	418	418	418	418	418	418	418	418	418	418
16	Legislative and regulatory	-	-	-	-	-	-	-	-	-	-	-
17	Other reliability, safety and environment	4,996	4,996	4,996	4,996	4,996	4,996	4,996	4,996	4,996	4,996	4,996
18	**Total reliability, safety and environment**	5,415	5,415	5,415	5,415	5,415	5,415	5,415	5,415	5,415	5,415	5,415
19	**Expenditure on network assets**	24,720	34,315	35,496	25,670	31,415	33,696	34,156	34,918	34,800	34,112	34,544
20	Expenditure on non-network assets	-	131	-	-	-	-	-	-	-	-	-
21	**Expenditure on assets**	24,720	34,446	35,496	25,670	31,415	33,696	34,156	34,918	34,800	34,112	34,544
22												
23	*plus* Cost of financing											
24	*less* Value of capital contributions	1,574	7,014	7,069	2,013	1,924	1,966	2,010	2,054	2,099	2,145	2,192
25	*plus* Value of vested assets											
26												
27	**Capital expenditure forecast**	23,146	27,433	28,427	23,656	29,492	31,730	32,147	32,864	32,701	31,967	32,352
28												
29	Assets commissioned	19,595	23,490	39,822	24,514	28,596	30,791	31,819	32,837	32,792	32,179	32,208
30		*Current Year CY*	*CY+1*	*CY+2*	*CY+3*	*CY+4*	*CY+5*	*CY+6*	*CY+7*	*CY+8*	*CY+9*	*CY+10*
31	for year ended	**31 Mar 22**	**31 Mar 23**	**31 Mar 24**	**31 Mar 25**	**31 Mar 26**	**31 Mar 27**	**31 Mar 28**	**31 Mar 29**	**31 Mar 30**	**31 Mar 31**	**31 Mar 32**
32		**$000 (in constant prices)**										
33	Consumer connection	3,309	13,045	13,045	3,211	2,957	2,957	2,957	2,957	2,957	2,957	2,957
34	System growth	1,925	3,330	3,813	4,714	3,453	3,582	3,582	3,582	3,582	3,582	3,582
35	Asset replacement and renewal	13,823	12,403	12,196	11,082	17,448	18,860	18,717	18,829	18,180	17,076	16,915
36	Asset relocations	202	123	123	123	123	123	123	123	123	123	123
37	Reliability, safety and environment:											
38	Quality of supply	418	630	478	740	478	478	478	478	478	478	478
39	Legislative and regulatory	-	-	-	-	-	-	-	-	-	-	-
40	Other reliability, safety and environment	4,996	4,438	3,415	3,412	1,916	2,063	2,240	2,403	2,403	2,403	2,403
41	**Total reliability, safety and environment**	5,415	5,068	3,892	4,152	2,394	2,541	2,718	2,880	2,880	2,880	2,880
42	**Expenditure on network assets**	24,673	33,969	33,069	23,281	26,374	28,063	28,097	28,372	27,723	26,619	26,458
43	Expenditure on non-network assets	-	91	-	-	-	-	-	-	-	-	-
44	**Expenditure on assets**	24,673	34,060	33,069	23,281	26,374	28,063	28,097	28,372	27,723	26,619	26,458
45												
46	**Subcomponents of expenditure on assets (where known)**											
47	Energy efficiency and demand side management, reduction of energy losses	N/A	N/A	N/A	N/A	N/A	N/A	N/A	N/A	N/A	N/A	N/A
48	Overhead to underground conversion	N/A	N/A	N/A	N/A	N/A	N/A	N/A	N/A	N/A	N/A	N/A
49	Research and development	N/A	N/A	N/A	N/A	N/A	N/A	N/A	N/A	N/A	N/A	N/A

		Current Year CY	CY+1	CY+2	CY+3	CY+4	CY+5	CY+6	CY+7	CY+8	CY+9	CY+10
	for year ended	31 Mar 22	31 Mar 23	31 Mar 24	31 Mar 25	31 Mar 26	31 Mar 27	31 Mar 28	31 Mar 29	31 Mar 30	31 Mar 31	31 Mar 32
Difference between nominal and constant price forecasts		$000										
Consumer connection		47	-	404	189	249	320	392	465	541	618	696
System growth		-	-	118	277	291	387	475	564	655	748	843
Asset replacement and renewal		-	-	378	652	1,470	2,039	2,480	2,964	3,324	3,567	3,983
Asset relocations		-	-	4	7	10	13	16	19	22	26	29
Reliability, safety and environment:												
Quality of supply		-	(211)	(59)	(321)	(59)	(59)	(59)	(59)	(59)	(59)	(59)
Legislative and regulatory		-	-	-	-	-	-	-	-	-	-	-
Other reliability, safety and environment		-	558	1,582	1,584	3,080	2,933	2,756	2,593	2,593	2,593	2,593
Total reliability, safety and environment		-	347	1,522	1,263	3,021	2,874	2,697	2,534	2,534	2,534	2,534
Expenditure on network assets		47	347	2,427	2,388	5,041	5,633	6,059	6,547	7,077	7,493	8,086
Expenditure on non-network assets		-	40	-	-	-	-	-	-	-	-	-
Expenditure on assets		47	387	2,427	2,388	5,041	5,633	6,059	6,547	7,077	7,493	8,086

		Current Year CY	CY+1	CY+2	CY+3	CY+4	CY+5
	for year ended	31 Mar 22	31 Mar 23	31 Mar 24	31 Mar 25	31 Mar 26	31 Mar 27
11a(ii): Consumer Connection							
*Consumer types defined by EDB**		$000 (in constant prices)					
Customer Connections (≤ 20kVA)		1,855	1,169	1,169	1,169	1,169	1,169
Customer Connections (21 to 99kVA)		554	572	572	572	572	572
Customer Connections (≥ 100kVA)		115	705	705	705	705	705
Distributed Generation Connection		-	6	6	6	6	6
New Subdivisions		785	506	506	506	506	506
Underwood substation upgrade for Alliance		-	625	625	-	-	-
McNab Substation upgrade to 33 kV		-	4,450	4,450	-	-	-
Kaiwera Downs - Mercury 45MW wind farm		-	5,012	5,012	-	-	-
Jericho - Southern Generation 35MW wind farm		-	-	-	254	-	-
*include additional rows if needed							
Consumer connection expenditure		3,309	13,045	13,045	3,211	2,957	2,957
less Capital contributions funding consumer connection		1,574	7,014	7,014	1,901	1,774	1,774
Consumer connection less capital contributions		1,735	6,031	6,031	1,310	1,183	1,183
11a(iii): System Growth							
Subtransmission		10	194	-	-	687	1,421
Zone substations		839	499	2,233	2,258	1,705	-
Distribution and LV lines		335	980	425	648	545	1,095
Distribution and LV cables		203	454	317	495	-	-
Distribution substations and transformers		335	749	522	817	344	711
Distribution switchgear		203	454	317	495	172	355
Other network assets		-	-	-	-	-	-
System growth expenditure		1,925	3,330	3,813	4,714	3,453	3,582
less Capital contributions funding system growth							
System growth less capital contributions		1,925	3,330	3,813	4,714	3,453	3,582

		Current Year CY	CY+1	CY+2	CY+3	CY+4	CY+5
	for year ended	31 Mar 22	31 Mar 23	31 Mar 24	31 Mar 25	31 Mar 26	31 Mar 27
11a(iv): Asset Replacement and Renewal		$000 (in constant prices)					
Subtransmission		243	269	269	269	269	1,145
Zone substations		1,987	2,084	1,982	1,714	4,985	2,450
Distribution and LV lines		5,783	4,499	4,499	4,499	5,055	6,919
Distribution and LV cables		143	363	363	363	1,096	363
Distribution substations and transformers		1,563	1,680	1,680	1,680	1,867	3,035
Distribution switchgear		4,058	3,416	3,310	2,465	4,082	4,857
Other network assets		46	93	93	93	93	93
Asset replacement and renewal expenditure		13,823	12,403	12,196	11,082	17,448	18,860
less Capital contributions funding asset replacement and renewal							
Asset replacement and renewal less capital contributions		13,823	12,403	12,196	11,082	17,448	18,860

		Current Year CY	CY+1	CY+2	CY+3	CY+4	CY+5
	for year ended	31 Mar 22	31 Mar 23	31 Mar 24	31 Mar 25	31 Mar 26	31 Mar 27
11a(v): Asset Relocations							
*Project or programme**		$000 (in constant prices)					
Line Relocations		202	123	123	123	123	123
**include additional rows if needed*							
All other project or programmes - asset relocations							
Asset relocations expenditure		202	123	123	123	123	123
less Capital contributions funding asset relocations							
Asset relocations less capital contributions		202	123	123	123	123	123

		Current Year CY	CY+1	CY+2	CY+3	CY+4	CY+5
	for year ended	31 Mar 22	31 Mar 23	31 Mar 24	31 Mar 25	31 Mar 26	31 Mar 27
11a(vi): Quality of Supply							
*Project or programme**		$000 (in constant prices)					
Supply Quality Upgrades		297	348	348	348	348	348
Mobile Substation Site Made Ready		3	152	-	262		-
Network Improvement Projects		119	129	129	129	129	129
**include additional rows if needed*							
All other projects or programmes - quality of supply							
Quality of supply expenditure		418	630	478	740	478	478
less Capital contributions funding quality of supply							
Quality of supply less capital contributions		418	630	478	740	478	478

		Current Year CY	CY+1	CY+2	CY+3	CY+4	CY+5
for year ended		31 Mar 22	31 Mar 23	31 Mar 24	31 Mar 25	31 Mar 26	31 Mar 27

11a(vii): Legislative and Regulatory

*Project or programme**	$000 (in constant prices)					
**include additional rows if needed*						
All other projects or programmes - legislative and regulatory						
Legislative and regulatory expenditure	-	-	-	-	-	-
less Capital contributions funding legislative and regulatory						
Legislative and regulatory less capital contributions	-	-	-	-	-	-

		Current Year CY	CY+1	CY+2	CY+3	CY+4	CY+5
for year ended		31 Mar 22	31 Mar 23	31 Mar 24	31 Mar 25	31 Mar 26	31 Mar 27

11a(viii): Other Reliability, Safety and Environment

*Project or programme**	$000 (in constant prices)					
Earth Upgrades	4,038	3,217	3,217	3,217	1,721	1,721
Substation Safety	43	267	-	-	-	-
Remote Area Power Supply	-	-	-	-	-	147
Hillside Protection Remediation	473	32	-	-	-	-
NER Installations	(27)	-	-	-	-	-
Communications Projects	471	360	198	195	195	195
North Gore Move OH structure away from Road Fence	-	368	-	-	-	-
Kennington Fibre install from Racecourse Rd	-	194	-	-	-	-
**include additional rows if needed*						
All other projects or programmes - other reliability, safety and environment						
Other reliability, safety and environment expenditure	4,996	4,438	3,415	3,412	1,916	2,063
less Capital contributions funding other reliability, safety and environment						
Other reliability, safety and environment less capital contributions	4,996	4,438	3,415	3,412	1,916	2,063

		Current Year CY	CY+1	CY+2	CY+3	CY+4	CY+5
for year ended		31 Mar 22	31 Mar 23	31 Mar 24	31 Mar 25	31 Mar 26	31 Mar 27

11a(ix): Non-Network Assets

Routine expenditure

*Project or programme**	$000 (in constant prices)					
**include additional rows if needed*						
All other projects or programmes - routine expenditure						
Routine expenditure	-	-	-	-	-	-
Atypical expenditure						
*Project or programme**						
Racecourse Road Airconditioning		80				
Racecourse Road Reception Window		11				
**include additional rows if needed*						
All other projects or programmes - atypical expenditure						
Atypical expenditure	-	91	-	-	-	-
Expenditure on non-network assets	-	91	-	-	-	-

Company Name	**The Power Company Limited**
AMP Planning Period	**1 April 2022 – 31 March 2032**

SCHEDULE 11b: REPORT ON FORECAST OPERATIONAL EXPENDITURE

This schedule requires a breakdown of forecast operational expenditure for the disclosure year and a 10 year planning period. The forecasts should be consistent with the supporting information set out in the AMP. The forecast is to be expressed in both constant price and nominal dollar terms.
EDBs must provide explanatory comment on the difference between constant price and nominal dollar operational expenditure forecasts in Schedule 14a (Mandatory Explanatory Notes).
This information is not part of audited disclosure information.

sch ref												
7		*Current Year CY*	*CY+1*	*CY+2*	*CY+3*	*CY+4*	*CY+5*	*CY+6*	*CY+7*	*CY+8*	*CY+9*	*CY+10*
8	for year ended	**31 Mar 22**	**31 Mar 23**	**31 Mar 24**	**31 Mar 25**	**31 Mar 26**	**31 Mar 27**	**31 Mar 28**	**31 Mar 29**	**31 Mar 30**	**31 Mar 31**	**31 Mar 32**
9	**Operational Expenditure Forecast**	**$000 (in nominal dollars)**										
10	Service interruptions and emergencies	3,680	3,825	3,943	4,050	4,147	4,238	4,332	4,427	4,524	4,624	4,726
11	Vegetation management	1,310	1,150	1,186	1,218	1,247	1,274	1,302	1,331	1,360	1,390	1,421
12	Routine and corrective maintenance and inspection	4,409	4,208	4,363	4,481	4,831	4,941	5,061	5,175	5,292	5,412	5,534
13	Asset replacement and renewal	810	842	868	892	946	944	965	986	1,008	1,030	1,053
14	**Network Opex**	10,209	10,025	10,360	10,640	11,171	11,398	11,660	11,919	12,184	12,456	12,733
15	System operations and network support	1,954	2,916	2,665	2,802	2,869	2,932	2,997	3,063	3,130	3,199	3,269
16	Business support	2,746	3,997	4,678	4,991	5,111	5,224	5,339	5,456	5,576	5,699	5,824
17	**Non-network opex**	4,700	6,913	7,344	7,793	7,980	8,156	8,335	8,519	8,706	8,898	9,093
18	**Operational expenditure**	14,909	16,938	17,704	18,433	19,151	19,554	19,995	20,438	20,891	21,353	21,826

19		*Current Year CY*	*CY+1*	*CY+2*	*CY+3*	*CY+4*	*CY+5*	*CY+6*	*CY+7*	*CY+8*	*CY+9*	*CY+10*
20	for year ended	**31 Mar 22**	**31 Mar 23**	**31 Mar 24**	**31 Mar 25**	**31 Mar 26**	**31 Mar 27**	**31 Mar 28**	**31 Mar 29**	**31 Mar 30**	**31 Mar 31**	**31 Mar 32**
21		**$000 (in constant prices)**										
22	Service interruptions and emergencies	3,680	3,825	3,825	3,825	3,825	3,825	3,825	3,825	3,825	3,825	3,825
23	Vegetation management	1,310	1,150	1,150	1,150	1,150	1,150	1,150	1,150	1,150	1,150	1,150
24	Routine and corrective maintenance and inspection	4,409	4,208	4,232	4,232	4,456	4,459	4,469	4,472	4,474	4,477	4,479
25	Asset replacement and renewal	810	842	842	842	872	852	852	852	852	852	852
26	**Network Opex**	10,209	10,025	10,048	10,048	10,303	10,286	10,296	10,298	10,301	10,303	10,306
27	System operations and network support	1,954	2,916	2,585	2,646	2,646	2,646	2,646	2,646	2,646	2,646	2,646
28	Business support	2,746	3,997	4,538	4,714	4,714	4,714	4,714	4,714	4,714	4,714	4,714
29	**Non-network opex**	4,700	6,913	7,123	7,360	7,360	7,360	7,360	7,360	7,360	7,360	7,360
30	**Operational expenditure**	14,909	16,938	17,171	17,409	17,663	17,646	17,656	17,659	17,661	17,664	17,666

31	**Subcomponents of operational expenditure (where known)**											
32	Energy efficiency and demand side management, reduction of											
33	energy losses	N/A	N/A	N/A	N/A	N/A	N/A	N/A	N/A	N/A	N/A	N/A
34	Direct billing*	N/A	N/A	N/A	N/A	N/A	N/A	N/A	N/A	N/A	N/A	N/A
35	Research and Development	N/A	N/A	N/A	N/A	N/A	N/A	N/A	N/A	N/A	N/A	N/A
36	Insurance	424	424	424	424	424	424	424	424	424	424	424

37 ** Direct billing expenditure by suppliers that direct bill the majority of their consumers*

38

39		*Current Year CY*	*CY+1*	*CY+2*	*CY+3*	*CY+4*	*CY+5*	*CY+6*	*CY+7*	*CY+8*	*CY+9*	*CY+10*
40	for year ended	**31 Mar 22**	**31 Mar 23**	**31 Mar 24**	**31 Mar 25**	**31 Mar 26**	**31 Mar 27**	**31 Mar 28**	**31 Mar 29**	**31 Mar 30**	**31 Mar 31**	**31 Mar 32**
41	**Difference between nominal and real forecasts**	**$000**										
42	Service interruptions and emergencies	-	-	119	225	322	413	507	602	699	799	901
43	Vegetation management	-	-	36	68	97	124	152	181	210	240	271
44	Routine and corrective maintenance and inspection	-	-	131	249	375	482	592	704	818	935	1,055
45	Asset replacement and renewal	-	-	26	50	73	92	113	134	156	178	201
46	**Network Opex**	-	-	312	591	868	1,112	1,364	1,621	1,884	2,152	2,427
47	System operations and network support	-	-	80	156	223	286	351	416	484	553	623
48	Business support	-	-	141	277	397	510	625	742	862	985	1,110
49	**Non-network opex**	-	-	221	433	620	796	975	1,158	1,346	1,537	1,733
50	**Operational expenditure**	-	-	532	1,024	1,488	1,908	2,339	2,779	3,229	3,690	4,160

Company Name	**The Power Company Limited**
AMP Planning Period	**1 April 2022 – 31 March 2032**

SCHEDULE 12a: REPORT ON ASSET CONDITION

This schedule requires a breakdown of asset condition by asset class as at the start of the forecast year. The data accuracy assessment relates to the percentage values disclosed in the asset condition columns. Also required is a forecast of the percentage of units to be replaced in the next 5 years. All information should be consistent with the information provided in the AMP and the expenditure on assets forecast in Schedule 11a. All units relating to cable and line assets, that are expressed in km, refer to circuit lengths.

sch ref

					Asset condition at start of planning period (percentage of units by grade)							
7												
8	**Voltage**	**Asset category**	**Asset class**	**Units**	**H1**	**H2**	**H3**	**H4**	**H5**	**Grade unknown**	**Data accuracy (1–4)**	**% of asset forecast to be replaced in next 5 years**
9												
10	All	Overhead Line	Concrete poles / steel structure	No.	0.1%	0.4%	2.0%	92.6%	4.9%	-	3	0.5%
11	All	Overhead Line	Wood poles	No.	11.6%	12.1%	4.3%	71.6%	0.5%	-	3	9.3%
12	All	Overhead Line	Other pole types	No.	N/A	N/A	N/A	N/A	N/A	N/A	N/A	N/A
13	HV	Subtransmission Line	Subtransmission OH up to 66kV conductor	km	-	5.0%	20.0%	53.0%	3.0%	19.0%	3	-
14	HV	Subtransmission Line	Subtransmission OH 110kV+ conductor	km	N/A	N/A	N/A	N/A	N/A	N/A	N/A	N/A
15	HV	Subtransmission Cable	Subtransmission UG up to 66kV (XLPE)	km	-	-	-	61.8%	38.2%	-	3	-
16	HV	Subtransmission Cable	Subtransmission UG up to 66kV (Oil pressurised)	km	N/A	N/A	N/A	N/A	N/A	N/A	N/A	N/A
17	HV	Subtransmission Cable	Subtransmission UG up to 66kV (Gas pressurised)	km	N/A	N/A	N/A	N/A	N/A	N/A	N/A	N/A
18	HV	Subtransmission Cable	Subtransmission UG up to 66kV (PILC)	km	-	-	-	100.0%	-	-	3	-
19	HV	Subtransmission Cable	Subtransmission UG 110kV+ (XLPE)	km	N/A	N/A	N/A	N/A	N/A	N/A	N/A	N/A
20	HV	Subtransmission Cable	Subtransmission UG 110kV+ (Oil pressurised)	km	N/A	N/A	N/A	N/A	N/A	N/A	N/A	N/A
21	HV	Subtransmission Cable	Subtransmission UG 110kV+ (Gas Pressurised)	km	N/A	N/A	N/A	N/A	N/A	N/A	N/A	N/A
22	HV	Subtransmission Cable	Subtransmission UG 110kV+ (PILC)	km	N/A	N/A	N/A	N/A	N/A	N/A	N/A	N/A
23	HV	Subtransmission Cable	Subtransmission submarine cable	km	N/A	N/A	N/A	N/A	N/A	N/A	N/A	N/A
24	HV	Zone substation Buildings	Zone substations up to 66kV	No.	-	5.0%	80.0%	10.0%	5.0%	-	3	2.6%
25	HV	Zone substation Buildings	Zone substations 110kV+	No.	N/A	N/A	N/A	N/A	N/A	N/A	N/A	N/A
26	HV	Zone substation switchgear	22/33kV CB (Indoor)	No.	-	-	-	100.0%	-	-	3	-
27	HV	Zone substation switchgear	22/33kV CB (Outdoor)	No.	-	2.5%	12.0%	77.0%	8.5%	-	4	30.0%
28	HV	Zone substation switchgear	33kV Switch (Ground Mounted)	No.	N/A	N/A	N/A	N/A	N/A	N/A	N/A	N/A
29	HV	Zone substation switchgear	33kV Switch (Pole Mounted)	No.	-	2.0%	20.0%	75.0%	3.0%	-	3	-
30	HV	Zone substation switchgear	33kV RMU	No.	-	-	-	-	100.0%	-	4	-
31	HV	Zone substation switchgear	50/66/110kV CB (Indoor)	No.	N/A	N/A	N/A	N/A	N/A	N/A	N/A	N/A
32	HV	Zone substation switchgear	50/66/110kV CB (Outdoor)	No.	-	2.0%	10.0%	78.0%	10.0%	-	3	-
33	HV	Zone substation switchgear	3.3/6.6/11/22kV CB (ground mounted)	No.	-	7.0%	10.0%	75.0%	8.0%	-	4	9.0%
34	HV	Zone substation switchgear	3.3/6.6/11/22kV CB (pole mounted)	No.	-	2.0%	15.0%	81.0%	2.0%	-	4	8.0%
35												

	Voltage	Asset category	Asset class	Units	H1	H2	H3	H4	H5	Grade unknown	Data accuracy (1–4)	% of asset forecast to be replaced in next 5 years
36					Asset condition at start of planning period (percentage of units by grade)							
37												
38												
39	HV	Zone Substation Transformer	Zone Substation Transformers	No.	1.0%	5.0%	10.0%	78.0%	6.0%	-	4	-
40	HV	Distribution Line	Distribution OH Open Wire Conductor	km	1.0%	4.0%	25.0%	45.0%	5.0%	20.0%	3	3.6%
41	HV	Distribution Line	Distribution OH Aerial Cable Conductor	km	N/A	N/A	N/A	N/A	N/A	N/A	N/A	N/A
42	HV	Distribution Line	SWER conductor	km	1.0%	4.0%	30.0%	40.0%	5.0%	20.0%	3	-
43	HV	Distribution Cable	Distribution UG XLPE or PVC	km	-	-	5.0%	70.0%	5.0%	20.0%	3	0.5%
44	HV	Distribution Cable	Distribution UG PILC	km	-	2.0%	8.0%	65.0%	5.0%	20.0%	3	4.0%
45	HV	Distribution Cable	Distribution Submarine Cable	km	N/A	N/A	N/A	N/A	N/A	N/A	N/A	N/A
46	HV	Distribution switchgear	3.3/6.6/11/22kV CB (pole mounted) - reclosers and sectionalisers	No.	-	1.0%	7.0%	77.6%	14.4%	-	4	-
47	HV	Distribution switchgear	3.3/6.6/11/22kV CB (Indoor)	No.	-		13.3%	20.0%	60.0%	6.7%	3	-
48	HV	Distribution switchgear	3.3/6.6/11/22kV Switches and fuses (pole mounted)	No.	0.5%	5.5%	14.0%	45.9%	9.1%	25.0%	3	20.0%
49	HV	Distribution switchgear	3.3/6.6/11/22kV Switch (ground mounted) - except RMU	No.	N/A	N/A	N/A	N/A	N/A	N/A	N/A	N/A
50	HV	Distribution switchgear	3.3/6.6/11/22kV RMU	No.	-	2.0%	9.0%	81.1%	7.9%	-	4	2.0%
51	HV	Distribution Transformer	Pole Mounted Transformer	No.	-	1.2%	14.0%	60.0%	4.8%	20.0%	3	2.8%
52	HV	Distribution Transformer	Ground Mounted Transformer	No.	-	1.0%	8.7%	85.0%	5.3%	-	3	5.0%
53	HV	Distribution Transformer	Voltage regulators	No.	-	-	-	80.9%	19.1%	-	3	-
54	HV	Distribution Substations	Ground Mounted Substation Housing	No.	N/A	N/A	N/A	N/A	N/A	N/A	N/A	N/A
55	LV	LV Line	LV OH Conductor	km	1.0%	4.0%	28.5%	40.0%	6.5%	20.0%	3	1.5%
56	LV	LV Cable	LV UG Cable	km	1.0%	4.0%	10.0%	60.0%	5.0%	20.0%	3	0.6%
57	LV	LV Streetlighting	LV OH/UG Streetlight circuit	km	1.0%	4.0%	19.0%	50.0%	6.0%	20.0%	3	0.3%
58	LV	Connections	OH/UG consumer service connections	No.	1.0%	4.0%	14.1%	55.0%	5.9%	20.0%	3	-
59	All	Protection	Protection relays (electromechanical, solid state and numeric)	No.	21.0%	10.0%	17.0%	16.0%	36.0%	-	3	8.0%
60	All	SCADA and communications	SCADA and communications equipment operating as a single system	Lot	-	5.0%	3.0%	85.0%	7.0%	-	4	1.0%
61	All	Capacitor Banks	Capacitors including controls	No.	-	-	-	100.0%	-	-	4	-
62	All	Load Control	Centralised plant	Lot	-	26.0%	26.0%	48.0%	-	-	4	-
63	All	Load Control	Relays	No.	N/A	N/A	N/A	N/A	N/A	N/A	N/A	N/A
64	All	Civils	Cable Tunnels	km	N/A	N/A	N/A	N/A	N/A	N/A	N/A	N/A

Company Name	**The Power Company Limited**
AMP Planning Period	**1 April 2022 – 31 March 2032**

SCHEDULE 12b: REPORT ON FORECAST CAPACITY

This schedule requires a breakdown of current and forecast capacity and utilisation for each zone substation and current distribution transformer capacity. The data provided should be consistent with the information provided in the AMP. Information provided in this table should relate to the operation of the network in its normal steady state configuration.

sch ref

7 **12b(i): System Growth - Zone Substations**

8

Existing Zone Substations	Current Peak Load (MVA)	Installed Firm Capacity (MVA)	Security of Supply Classification (type)	Transfer Capacity (MVA)	Utilisation of Installed Firm Capacity %	Installed Firm Capacity +5 years (MVA)	Utilisation of Installed Firm Capacity + 5yrs %	Installed Firm Capacity Constraint +5 years (cause)	Explanation
Athol	1	-	N	2	-	-	-	No constraint within +5 years	
Awarua Chip Mill	1	-	N	1	-	-	-	No constraint within +5 years	
Bluff	6	13	N-1	2	47%	13	52%	No constraint within +5 years	
Centre Bush	4	-	N	1	-	-	-	No constraint within +5 years	
Colyer Road	10	12	N-1	4	85%	12	89%	No constraint within +5 years	
Conical Hill	4	5	N-1	1	73%	5	79%	No constraint within +5 years	
Dipton	2	-	N	0	-	-	-	No constraint within +5 years	
Edendale Fonterra	29	46	N-1	-	64%	46	65%	No constraint within +5 years	
Edendale	7	12	N-1	2	57%	12	60%	No constraint within +5 years	
Glenham	1	-	N	1	-	-	-	No constraint within +5 years	Transformer upgrade planned for 2025/26 to increase capacity
Gorge Road	3	-	N	2	-	-	-	No constraint within +5 years	
Hedgehope	2	-	N	2	-	-	-	No constraint within +5 years	
Hillside	1	-	N	1	-	-	-	No constraint within +5 years	
Isla Bank	2	-	N	2	-	-	-	No constraint within +5 years	
Kelso	5	-	N	2	-	-	-	No constraint within +5 years	Transformer upgrade planned for 2025/26 to increase capacity
Kennington	7	12	N-1 switched	4	60%	12	67%	No constraint within +5 years	
Lumsden	4	-	N	1	-	-	-	No constraint within +5 years	
Makarewa	4	12	N-1	2	36%	12	36%	No constraint within +5 years	
Mataura	8	10	N-1	2	79%	10	81%	No constraint within +5 years	
McNab	-	-	N-1	-	-	25	68%	No constraint within +5 years	New substation dedicated to single customer from 2023/24
Monowai	-	-	N	-	-	-	-	No constraint within +5 years	
Mossburn	2	-	N	2	-	-	-	No constraint within +5 years	
North Gore	9	10	N-1	8	88%	10	93%	Transformer	Fans can be added to second transformer to increase firm capacity
North Makarewa	36	40	N-1	-	89%	40	94%	Transformer	Riversdale load is transferrable between North Makarewa GXP and Gore GXP. Generation available at Monowai, White Hills and the future Jericho
Ohai	3	-	N	1	-	-	-	No constraint within +5 years	
Orawia	3	-	N	2	-	-	-	No constraint within +5 years	
Otatara	5	-	N	3	-	-	-	No constraint within +5 years	
Otautau	4	-	N	3	-	-	-	No constraint within +5 years	
Riversdale	5	-	N	2	-	8	77%	No constraint within +5 years	Second transformer to be installed in 2024/25
Riverton	5	8	N-1	3	70%	8	77%	No constraint within +5 years	
Seaward Bush	8	10	N-1	4	78%	10	80%	No constraint within +5 years	
South Gore	11	12	N-1	8	89%	12	96%	No constraint within +5 years	
Te Anau	6	12	N-1	1	52%	12	57%	No constraint within +5 years	
Tokanui	2	-	N	1	-	-	-	No constraint within +5 years	
Underwood	11	20	N-1	4	53%	20	53%	No constraint within +5 years	
Waikaka	1	-	N	1	-	-	-	No constraint within +5 years	
Waikiwi	12	23	N-1	2		23	60%	No constraint within +5 years	
Winton	11	12	N-1	3	88%	12	90%	Transformer	

29 *[1] Extend forecast capacity table as necessary to disclose all capacity by each zone substation*

Company Name	**The Power Company Limited**
AMP Planning Period	**1 April 2022 – 31 March 2032**

SCHEDULE 12C: REPORT ON FORECAST NETWORK DEMAND

This schedule requires a forecast of new connections (by consumer type), peak demand and energy volumes for the disclosure year and a 5 year planning period. The forecasts should be consistent with the supporting information set out in the AMP as well as the assumptions used in developing the expenditure forecasts in Schedule 11a and Schedule 11b and the capacity and utilisation forecasts in Schedule 12b.

sch ref

12c(i): Consumer Connections

Number of ICPs connected in year by consumer type

		Number of connections					
		Current Year CY	*CY+1*	*CY+2*	*CY+3*	*CY+4*	*CY+5*
	for year ended	**31 Mar 22**	**31 Mar 23**	**31 Mar 24**	**31 Mar 25**	**31 Mar 26**	**31 Mar 27**
*Consumer types defined by EDB**							
Customer Connections (≤ 20kVA)		405	400	400	400	400	400
Customer Connections (21 to 99kVA)		33	30	30	30	30	30
Customer Connections (≥ 100kVA)		3	3	3	3	3	3
Connections total		441	433	433	433	433	433

**include additional rows if needed*

Distributed generation

Number of connections	109	100	100	100	100	100
Capacity of distributed generation installed in year (MVA)	1	1	1	1	1	1

12c(ii) System Demand

		Current Year CY	*CY+1*	*CY+2*	*CY+3*	*CY+4*	*CY+5*
Maximum coincident system demand (MW)	for year ended	**31 Mar 22**	**31 Mar 23**	**31 Mar 24**	**31 Mar 25**	**31 Mar 26**	**31 Mar 27**
GXP demand		161	162	175	176	177	178
plus Distributed generation output at HV and above		6	6	11	11	11	11
Maximum coincident system demand		167	168	186	187	188	188
less Net transfers to (from) other EDBs at HV and above		(1)	(1)	(1)	(1)	(1)	(1)
Demand on system for supply to consumers' connection points		168	169	187	188	189	190
Electricity volumes carried (GWh)							
Electricity supplied from GXPs		711	714	766	785	789	792
less Electricity exports to GXPs		16	15	49	131	169	169
plus Electricity supplied from distributed generation		171	171	221	308	346	346
less Net electricity supplied to (from) other EDBs		12	12	12	12	13	13
Electricity entering system for supply to ICPs		854	858	925	950	953	957
less Total energy delivered to ICPs		807	811	874	898	901	904
Losses		47	47	51	52	52	53
Load factor		58%	58%	56%	58%	58%	58%
Loss ratio		5.5%	5.5%	5.5%	5.5%	5.5%	5.5%

Company Name	**The Power Company Limited**
AMP Planning Period	**1 April 2022 – 31 March 2032**
Network / Sub-network Name	

SCHEDULE 12d: REPORT FORECAST INTERRUPTIONS AND DURATION

This schedule requires a forecast of SAIFI and SAIDI for disclosure and a 5 year planning period. The forecasts should be consistent with the supporting information set out in the AMP as well as the assumed impact of planned and unplanned SAIFI and SAIDI on the expenditures forecast provided in Schedule 11a and Schedule 11b.

sch ref		*Current Year CY*	*CY+1*	*CY+2*	*CY+3*	*CY+4*	*CY+5*
8							
9	for year ended	**31 Mar 22**	**31 Mar 23**	**31 Mar 24**	**31 Mar 25**	**31 Mar 26**	**31 Mar 27**
10	**SAIDI**						
11	Class B (planned interruptions on the network)	100.4	131.5	131.5	131.5	145.7	145.7
12	Class C (unplanned interruptions on the network)	164.1	151.8	150.3	148.8	147.3	145.8
13	**SAIFI**						
14	Class B (planned interruptions on the network)	0.80	0.61	0.61	0.61	0.67	0.67
15	Class C (unplanned interruptions on the network)	2.70	3.39	3.36	3.32	3.29	3.26

SCHEDULE 13: REPORT ON ASSET MANAGEMENT MATURITY

This schedule requires information on the EDB'S self-assessment of the maturity of its asset management practices.

Q No.	Function	Question	Score Mar 2019	Maturity Level Description
3	Asset management policy	To what extent has an asset management policy been documented, authorised and communicated?	2.2	The organisation has an asset management policy, which has been authorised by top management, but it has had limited circulation. It may be in use to influence development of strategy and planning but its effect is limited.
10	Asset management strategy	What has the organisation done to ensure that its asset management strategy is consistent with other appropriate organisational policies and strategies, and the needs of stakeholders?	2.2	All linkages are in place and evidence is available to demonstrate that, where appropriate, the organisation's asset management strategy is consistent with its other organisational policies and strategies. The organisation has also identified and considered the requirements of relevant stakeholders.
11	Asset management strategy	In what way does the organisation's asset management strategy take account of the lifecycle of the assets, asset types and asset systems over which the organisation has stewardship?	2.4	The long-term asset management strategy takes account of the lifecycle of some, but not all, of its assets, asset types and asset systems.
26	Asset management plan(s)	How does the organisation establish and document its asset management plan(s) across the life cycle activities of its assets and asset systems?	1.8	The organisation is in the process of putting in place comprehensive, documented asset management plan(s) that cover all life cycle activities, clearly aligned to asset management objectives and the asset management strategy.
27	Asset management plan(s)	How has the organisation communicated its plan(s) to all relevant parties to a level of detail appropriate to the receiver's role in their delivery?	2.3	Communicated to those responsible for delivery is either irregular or ad-hoc.
29	Asset management plan(s)	How are designated responsibilities for delivery of asset plan actions documented?	1.8	Asset management plan(s) consistently document responsibilities for the delivery of actions but responsibility/authority levels are inappropriate/ inadequate, and/or there are misalignments within the organisation.
31	Asset management plan(s)	What has the organisation done to ensure that appropriate arrangements are made available for the efficient and cost effective implementation of the plan(s)? (Note this is about resources and enabling support)	2.4	The organisation's arrangements fully cover all the requirements for the efficient and cost effective implementation of asset management plan(s) and realistically address the resources and timescales required, and any changes needed to functional policies, standards, processes and the asset management information system.

33	Contingency planning	What plan(s) and procedure(s) does the organisation have for identifying and responding to incidents and emergency situations and ensuring continuity of critical asset management activities?	2.7	Most credible incidents and emergency situations are identified. Either appropriate plan(s) and procedure(s) are incomplete for critical activities or they are inadequate. Training/ external alignment may be incomplete.
37	Structure, authority and responsibilities	What has the organisation done to appoint member(s) of its management team to be responsible for ensuring that the organisation's assets deliver the requirements of the asset management strategy, objectives and plan(s)?	1.9	The appointed person or persons have full responsibility for ensuring that the organisation's assets deliver the requirements of the asset management strategy, objectives and plan(s). They have been given the necessary authority to achieve this.
40	Structure, authority and responsibilities	What evidence can the organisation's top management provide to demonstrate that sufficient resources are available for asset management?	2.0	A process exists for determining what resources are required for its asset management activities and in most cases these are available but in some instances resources remain insufficient.
42	Structure, authority and responsibilities	To what degree does the organisation's top management communicate the importance of meeting its asset management requirements?	1.8	Top management communicates the importance of meeting its asset management requirements to all relevant parts of the organisation.
45	Outsourcing of asset management activities	Where the organisation has outsourced some of its asset management activities, how has it ensured that appropriate controls are in place to ensure the compliant delivery of its organisational strategic plan, and its asset management policy and strategy?	1.8	Evidence exists to demonstrate that outsourced activities are appropriately controlled to provide for the compliant delivery of the organisational strategic plan, asset management policy and strategy, and that these controls are integrated into the asset management system
48	Training, awareness and competence	How does the organisation develop plan(s) for the human resources required to undertake asset management activities - including the development and delivery of asset management strategy, process(es), objectives and plan(s)?	1.8	The organisation has developed a strategic approach to aligning competencies and human resources to the asset management system including the asset management plan but the work is incomplete or has not been consistently implemented.
49	Training, awareness and competence	How does the organisation identify competency requirements and then plan, provide and record the training necessary to achieve the competencies?	1.7	The organisation is the process of identifying competency requirements aligned to the asset management plan(s) and then plan, provide and record appropriate training. It is incomplete or inconsistently applied.
50	Training, awareness and competence	How does the organization ensure that persons under its direct control undertaking asset management related activities have an appropriate level of competence in terms of education, training or experience?	2.2	The organization is in the process of putting in place a means for assessing the competence of person(s) involved in asset management activities including contractors. There are gaps and inconsistencies.
53	Communication, participation, consultation	How does the organisation ensure that pertinent asset management information is effectively communicated to and from employees and other stakeholders, including contracted service providers?	2.1	The organisation has determined pertinent information and relevant parties. Some effective two way communication is in place but as yet not all relevant parties are clear on their roles and responsibilities with respect to asset management information.
59	Asset Management System documentation	What documentation has the organisation established to describe the main elements of its asset management system and interactions between them?	2.3	The organisation in the process of documenting its asset management system and has documentation in place that describes some, but not all, of the main elements of its asset management system and their interaction.
62	Information management	What has the organisation done to determine what its asset management information system(s) should contain in order to support its asset management system?	2.2	The organisation has developed a structured process to determine what its asset information system should contain in order to support its asset management system and has commenced implementation of the process.

63	Information management	How does the organisation maintain its asset management information system(s) and ensure that the data held within it (them) is of the requisite quality and accuracy and is consistent?	1.8	The organisation has developed a controls that will ensure the data held is of the requisite quality and accuracy and is consistent and is in the process of implementing them.
64	Information management	How has the organisation's ensured its asset management information system is relevant to its needs?	2.3	The organisation has developed and is implementing a process to ensure its asset management information system is relevant to its needs. Gaps between what the information system provides and the organisations needs have been identified and action is being taken to close them.
69	Risk management process(es)	How has the organisation documented process(es) and/or procedure(s) for the identification and assessment of asset and asset management related risks throughout the asset life cycle?	2.5	The organisation is in the process of documenting the identification and assessment of asset related risk across the asset lifecycle but it is incomplete or there are inconsistencies between approaches and a lack of integration.
79	Use and maintenance of asset risk information	How does the organisation ensure that the results of risk assessments provide input into the identification of adequate resources and training and competency needs?	2.4	The organisation is in the process ensuring that outputs of risk assessment are included in developing requirements for resources and training. The implementation is incomplete and there are gaps and inconsistencies.
82	Legal and other requirements	What procedure does the organisation have to identify and provide access to its legal, regulatory, statutory and other asset management requirements, and how is requirements incorporated into the asset management system?	2.2	The organisation has not considered the need to identify its legal, regulatory, statutory and other asset management requirements.
88	Life Cycle Activities	How does the organisation establish implement and maintain process(es) for the implementation of its asset management plan(s) and control of activities across the creation, acquisition or enhancement of assets. This includes design, modification, procurement, construction and commissioning activities?	2.2	The organisation is in the process of putting in place process(es) and procedure(s) to manage and control the implementation of asset management plan(s) during activities related to asset creation including design, modification, procurement, construction and commissioning. Gaps and inconsistencies are being addressed.
91	Life Cycle Activities	How does the organisation ensure that process(es) and/or procedure(s) for the implementation of asset management plan(s) and control of activities during maintenance (and inspection) of assets are sufficient to ensure activities are carried out under specified conditions, are consistent with asset management strategy and control cost, risk and performance?	2.4	The organisation is in the process of putting in place process(es) and procedure(s) to manage and control the implementation of asset management plan(s) during this life cycle phase. They include a process for confirming the process(es)/procedure(s) are effective and if necessary carrying out modifications.
95	Performance and condition monitoring	How does the organisation measure the performance and condition of its assets?	1.8	The organisation is developing coherent asset performance monitoring linked to asset management objectives. Reactive and proactive measures are in place. Use is being made of leading indicators and analysis. Gaps and inconsistencies remain.
99	Investigation of asset-related failures, incidents and nonconformities	How does the organisation ensure responsibility and the authority for the handling, investigation and mitigation of asset-related failures, incidents and emergency situations and non conformances is clear, unambiguous, understood and communicated?	2.3	The organisation understands the requirements and is in the process of determining how to define them.
105	Audit	What has the organisation done to establish procedure(s) for the audit of its asset management system (process(es))?	1.8	The organisation is establishing its audit procedure(s) but they do not yet cover all the appropriate asset-related activities.

109	Corrective & Preventative action	How does the organisation instigate appropriate corrective and/or preventive actions to eliminate or prevent the causes of identified poor performance and non conformance?	2.4	The need is recognized for systematic instigation of preventive and corrective actions to address root causes of non compliance or incidents identified by investigations, compliance evaluation or audit. It is only partially or inconsistently in place.
113	Continual Improvement	How does the organisation achieve continual improvement in the optimal combination of costs, asset related risks and the performance and condition of assets and asset systems across the whole life cycle?	2.7	Continuous improvement process(es) are set out and include consideration of cost risk, performance and condition for assets managed across the whole life cycle but it is not yet being systematically applied.
115	Continual Improvement	How does the organisation seek and acquire knowledge about new asset management related technology and practices, and evaluate their potential benefit to the organisation?	1.9	The organisation actively engages internally and externally with other asset management practitioners, professional bodies and relevant conferences. Actively investigates and evaluates new practices and evolves its asset management activities using appropriate developments.

Schedule 14a - Mandatory Explanatory Notes on Forecast Information

Company Name	The Power Company Limited
For Year Ended	31 March 2022

(In this Schedule, clause references are to the Electricity Distribution Information Disclosure Determination 2012 – as amended and consolidated 3 April 2018.)

1. This Schedule requires EDBs to provide explanatory notes to reports prepared in accordance with clause 2.6.6.

2. This Schedule is mandatory—EDBs must provide the explanatory comment specified below, in accordance with clause 2.7.2. This information is not part of the audited disclosure information, and so is not subject to the assurance requirements specified in section 2.8.

Commentary on difference between nominal and constant price capital expenditure forecasts (Schedule 11a)

3. In the box below, comment on the difference between nominal and constant price capital expenditure for the current disclosure year and 10 year planning period, as disclosed in Schedule 11a.

Box 1: Commentary on difference between nominal and constant price capital expenditure forecasts

Inflationary assumptions were used to calculate the nominal prices in the forecast. Nominal Prices are based on NZ Treasury's economic forecasts, as published in the Half Year Economic and Fiscal Update released December 2021.

	2022/23	2023/24	2024/25	2025/26	2026/27
Inflator CAPEX	5.100%	3.100%	2.700%	2.400%	2.200%

In addition to the general inflation, material costs have increased by a weighted average of 17% in 2021. This 17% was included in the CAPEX forecasts for 2022 onwards.

Forecasts are in line with the business plan projections and explanations outlined in the Asset Management Plan

Commentary on difference between nominal and constant price operational expenditure forecasts (Schedule 11b)

4. In the box below, comment on the difference between nominal and constant price operational expenditure for the current disclosure year and 10 year planning period, as disclosed in Schedule 11b.

Box 2: Commentary on difference between nominal and constant price operational expenditure forecasts

Nominal Prices are based on NZ Treasury's economic forecasts, as published in the Half Year Economic and Fiscal Update released December 2021.

	2022/23	2023/24	2024/25	2025/26	2026/27
Inflator OPEX	5.100%	3.100%	2.700%	2.400%	2.200%

In addition to the general inflation, material costs have increased by a weighted average of 17% in 2021. This 17% was included in the CAPEX forecasts for 2022 onwards.

Forecasts are in line with the business plan projections and explanations outlined in the Asset Management Plan

Appendix 4 – Directors Approval

Certification for Year-beginning Disclosures

We, Douglas William Fraser and, Donald Owen Nicolson being directors of The Power Company Limited certify that, having made all reasonable enquiry, to the best of our knowledge-

a) The following attached information of The Power Company Limited prepared for the purposes of clause 2.6.1 and 2.6.6 of the Electricity Distribution Information Disclosure Determination 2012 in all material respects complies with that determination.

b) The prospective financial or non-financial information included in the attached information has been measured on a basis consistent with regulatory requirements or recognised industry standards.

c) The forecasts in Schedules 11a, 11b, 12a, 12b, 12c, 12d and 14a are based on objective and reasonable assumptions which both align with The Power Company Limited' corporate vision and strategy and are documented in retained records.

D W Fraser

D O Nicolson

Date: 30 March 2022